SKYBLADE FAN CO.
Where Form Follows Function

STOL SERIES

Patent pending

10'-24'

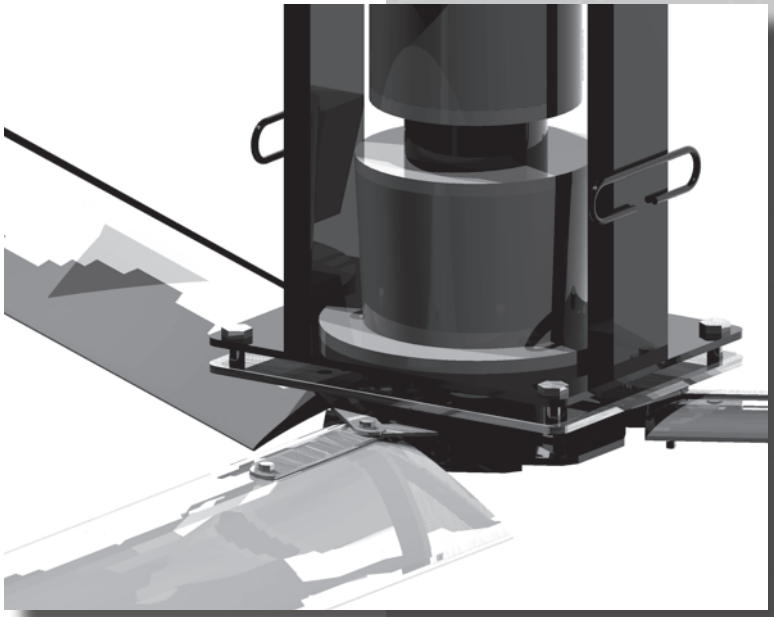

INSTALLATION MANUAL

Custom Designed

Reduced Maintenance

STOL Technology

Cat.No.SBF1-1

Intertek

IMPORTANT

READ AND SAVE THESE INSTRUCTIONS.
A printable, electronic version is available online at skybladefans.com.

WARNING/AVERTISSEMENT

Improper installation, adjustment, alteration, service or maintenance can cause property damage, injury or death. Read and understand the installation, operating and maintenance instructions thoroughly before installing or servicing this equipment.

Une installation, un réglage, une modification, un service ou d'entretien peuvent causer des dommages matériels, des blessures ou la mort. Lire et comprendre les instructions d'installation, d'exploitation et d'entretien avant d'installer ou de réparer ce matériel.

To Reduce the Risk of Fire, Electric Shock, or Injury to Persons, Observe the Following:

Installation work and electrical wiring must be done by qualified person(s) in accordance with all applicable codes and standards, including fire-rated construction. Failure to comply could result in personal injury, electric shock, death, fire and/or property damage.

Before attempting installation, servicing or cleaning unit, switch power off at the service panel and lock the service disconnecting means to prevent power from being switched on accidentally.

Pour réduire le risque d'incendie, de choc électrique ou de blessures, observer les points suivants:

Les travaux d'installation et le câblage électrique doivent être effectués par une personne qualifiée (s) en conformité avec tous les codes et normes applicables, y compris la construction coupe-feu. Le non-respect peut entraîner des blessures corporelles, de choc électrique, la mort, un incendie et / ou des dommages matériels.

Avant d'entreprendre l'installation, l'entretien ou un nettoyage, coupez l'alimentation électrique au panneau de service et bloquez les dispositifs de sectionnement pour éviter une mise en marche accidentelle.

IMPORTANT

⚠ CAUTION/ATTENTION

The installation must be in accordance with the requirements specified in this installation manual and with any additional requirements set forth by the national electric code (NEC), ANSI/NFPA 70-1999, and all local codes. Failure to comply with these codes could result in personal injury or property damage.

L'installation doit être en conformité avec les exigences spécifiées dans le présent manuel d'installation et avec des exigences supplémentaires prévues par le code électrique national (NEC), ANSI / NFPA 70-1999, et tous les codes locaux. Le non respect de ces codes peut entraîner des blessures ou des dommages matériels.

The installation of this fan requires the use of power tools. Follow the safety procedures found in the owner's manual of these tools and do not use them for purposes other than those intended by the manufacturer.

L'installation de ce ventilateur nécessite l'utilisation d'outils électriques. Suivez les consignes de sécurité figurant dans le manuel du propriétaire de ces outils et ne pas les utiliser à des fins autres que celles prévues par le fabricant.

This unit has an unguarded impeller. Do not use in locations readily accessible to people or animals.

Cet appareil possède une roue sans surveillance. Ne pas utiliser dans des endroits facilement accessibles pour les personnes ou les animaux.

Use this unit only in the manner intended by the manufacturer. If you have questions, contact the manufacturer. The limited warranty does not cover equipment damage or failure that is caused by improper installation.

Utiliser cet appareil uniquement de la manière prévue par le fabricant. Si vous avez des questions, contactez le fabricant. La garantie limitée ne couvre pas les dommages à l'équipement ou de l'échec qui est causé par une mauvaise installation.

While its unlikely, gearboxes may leak oil in rare instances. Please contact SkyBlade Fan Company if this occurs.

Bien que ce soit peu probable, les boîtes de vitesses peuvent fuir de l'huile dans de rares cas. Veuillez contacter SkyBlade Fan Company si cela se produit.

Geared fans will make some notable noise. The decibels (dBA) has been measured in SkyBlade Fan Company's testing facility. The sound levels from the fan operating at maximum speed shall not exceed 56-60 dBA.

Les ventilateurs à engrenages feront un bruit notable. Les décibels (dBA) ont été mesurés dans l'installation de test de SkyBlade Fan Company. Les niveaux sonores du ventilateur fonctionnant à la vitesse maximale ne doivent pas dépasser 56 à 60 dBA.

This appliance can be used by children aged from 8 years and above and persons with reduced physical, sensory or mental capabilities or lack of experience and knowledge if they have been given supervision or instruction concerning use of the appliance in a safe way and understand the hazards involved. Children shall not play with the appliance. Cleaning and user maintenance shall not be made by children without supervision.

CONTENTS

1 Fan Diagram 6

2 Important Information 7

3 Mounting Considerations 8

4 Preparing the Work Site 9

5 Mounting Methods 10-19
- Mounting Method 1: I-Beam 10
- Mounting Method 2: Angle Iron 11-15
- Mounting Method 3: Purlins 16-17
- Mounting Method 4: Upper Truss 18-19

6 Hanging the Fan 20-21

7 Installing Guy Wires/Gripple 22-23
Pressure Relief Valve Installation....24

8 Installing Blades, Motor Cover, and Motor Hub 25-30

9 Electrical Installation 31-37
- Wiring to a Fire Alarm Panel 36
- Wiring the Motor 37

10 Troubleshooting 38-39

11 User Servicing Instructions 40-41

STOL Control and Power Assembly (patent pending)

MODEL	DESCRIPTION	LENGTH (Y)	WIDTH (X)	HEIGHT (Z)	SHIPPING WEIGHT
STOL	Control & Power Assembly	33.0" (839mm)	30.5" (775mm)	30.5" (775mm)	280 lbs. (127 kg.)

STOL Blades (patent pending)

MODEL	DESCRIPTION	WIDTH (X)	LENGTH (Y)	HEIGHT (Z)	SHIPPING WEIGHT
1030-6	10' / 3.0M Fan	32" (813mm)	94" (2,388mm)	19" (483mm)	90 lbs. (41 kg.)
1236-6	12' / 3.6M Fan	32" (813mm)	94" (2,388mm)	19" (483mm)	100 lbs. (46 kg.)
1443-6	14' / 4.3M Fan	32" (813mm)	94" (2,388mm)	19" (483mm)	110 lbs. (50 kg.)
1649-6	16' / 4.9M Fan	32" (813mm)	94" (2,388mm)	19" (483mm)	120 lbs. (55 kg.)
1855-6	18' / 5.5M Fan	32" (813mm)	142" (3,607mm)	19" (483mm)	140 lbs. (64 kg.)
2061-6	20' / 6.1M Fan	32" (813mm)	142" (3,607mm)	19" (483mm)	150 lbs. (68 kg.)
2473-6	24' / 7.3M Fan	32" (813mm)	142" (3,607mm)	19" (483mm)	180 lbs. (82 kg.)

WHAT'S IN THE BOX

Prior to installation, verify that you have received all fan contents included with your system by checking them against the packing list. Materials not included in the fan contents (e.g., Grade 5 hardware, etc.) are the responsibility of the installer. Notify your product representative or Skyblade Fan Company of any discrepancy or missing kit contents prior to installing unit.

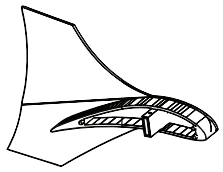

Wingtips (x6)

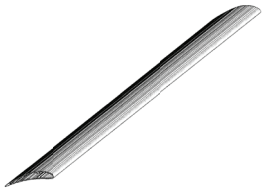

Blades (x6)

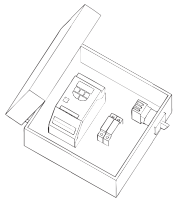

VFD Enclosure (x1) & Strain Relief Bushing (x3)

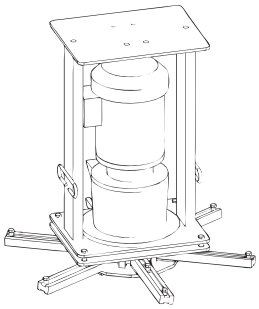

Motor & Chassis (x1)

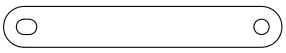

Blade Straight Bracket (x6)

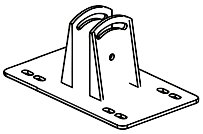

Upper Yoke (x1)

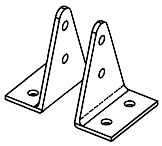

Lower Yoke (x2)

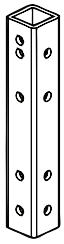

Extension Bar (x1)

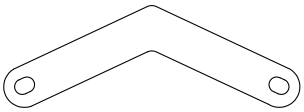

Blade Boomerang Bracket (x6)

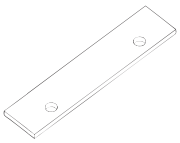

Clamping Shim (x2)

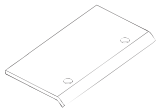

Clamping Plate (x2)

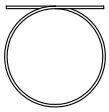

Motor Supply Cable (x1 - 25')

Gripple Packet

5	Gripple Fasteners
4	15' Guy Wires
1	5' Safety Cable

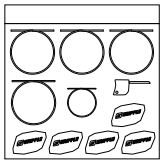

Hardware Packet 1
(Mounting Assembly)

4	1/2"-13x3-1/2" GR5 Bolt
4	1/2"-13x2-1/2" GR5 Bolt
4	1/2"-13x1-1/2" GR5 Bolt
24	1/2" GR5 Washer
12	1/2" GR8 Nylock Nut

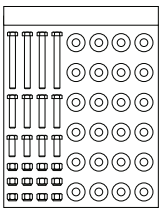

Hardware Packet 2
(Blade Assembly)

6	5/16"-24x2" GR5 Bolt
6	5/16"-24x1-3/4" GR5 Bolt
24	5/16" GR5 Washer
12	5/16" GR5 Nylock Nut
6	#6x5/8" Flat Phil Screw

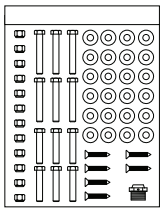

Hardware Packet 3
(Extra Hardware)

1	1/2"-13x3-1/2" GR5 Bolt
1	1/2"-13x2-1/2" GR5 Bolt
1	1/2"-13x1-1/2" GR5 Bolt
6	1/2" GR5 Washer
6	1/2" GR8 Nylock Nut
2	5/16"-24x1-3/4"GR5 Bolt
2	5/16"-24x2" GR5 Bolt
6	5/16" GR5 Washer
6	5/16" GR5 Nylock Nut
3	#6x5/8" Flat Phil Screw

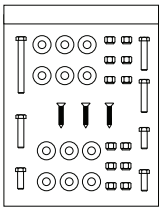

Reference Controller Brochure for additional hardware.

1 FAN DIAGRAM

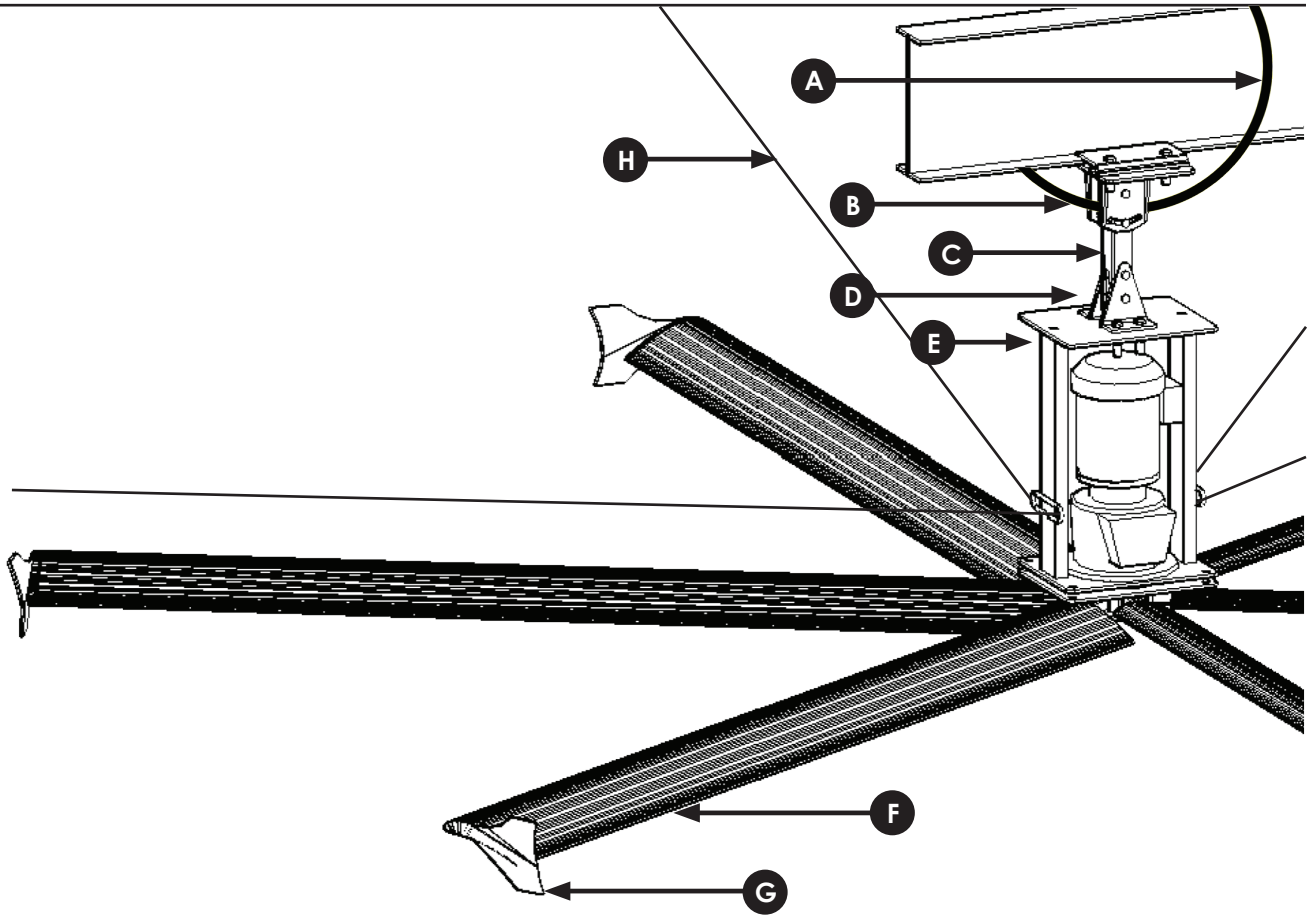

A. **Safety Cable:** Used as a redundant safety feature that secures the fan to the mounting structure.

B. **Upper Yoke:** Secures the fan to the structure and allows the fan to hang in a vertical direction.

C. **Extension Bar:** Extends the fan from the ceiling to reach optimum operating height.

D. **Lower Yoke:** Connects the chassis to mounting assembly.

E. **Chassis:** Housing for the motor and gear reducer.

F. **Blade:** Provides air movement.

G. **Wingtips:** Improves air movement efficiency by reducing drag.

H. **4-Point Safety Cables:** Used as a redundant safety feature that secures the fan to the mounting structure.

SERIES	STOL				STOL				STOL				STOL				STOL				STOL				STOL			
DIAMETER	10' / 3.0m				12' / 3.6m				14' / 4.3m				16' / 4.9m				18' / 5.5m				20' / 6.1m				24' / 7.3m			
BLADES	6				6				6				6				6				6				6			
VOLTAGE INPUT	115	230	460	575	115	230	460	575	115	230	460	575	115	230	460	575	115	230	460	575	115	230	460	575	115	230	460	575

Model Number Ordering Format: SERIES-DIAMETER-BLADES-INPUT VOLTAGE-PHASE
Sample Model Number: STOL-1649-623-1

2 IMPORTANT INFORMATION

2.1 Skyblade Safety Components

Skyblade fans are designed with redundant safety features to provide protection in the unlikely event of a catastrophic failure. Follow installation instructions carefully when installing fans.

2.2 Fan Spacing's and Placement

A standard ceiling fan should be mounted so that the bottom of the fans hub is 38 inches below the bottom of the beam which it is mounted. Fan blades should be mounted between 10' and 50' above the floor with optimum height between 20'-30'. If desired, extension bars are available to lower the fan if needed. Avoid mounting fans directly below lights or skylights to avoid a strobe effect caused by the moving blades.

When mounting a fan in an area where objects may be lifted or moved into the path of the fan, Skyblade Fans recommends marking or painting hash lines on the floor to alert personnel of the above movement of the fan.

The area within 15% of the diameter when the fan is at rest is considered "close clearance". It is extremely dangerous to mount the fans within "close clearance" of any object or path of object. We strongly recommend not mounting the fan closer than 15% of its diameter to any object or its path. If this is an issue, mounting extension bars and smaller fans are available from Skyblade Fans.

2.3 Fire Suppression Systems and Fan Placement

If installing Fans in a location where fire sprinklers are in place, do not interfere with their correct operation. Fans should be located in the center of each sprinkler quadrant and no less than 3 feet below the sprinkler. Review all codes applicable to sprinkler systems prior to installation; it is the customer's responsibility to see that the installation is completed to code and that it is correct.

2.4 Locating Control Panels

Each fan has its own motor control enclosure (MCE). Each MCE can be mounted up to 25 feet from the center of the fan with the wire provided by the factory. The MCE can be located no further than 110 feet away from the fan when field supplied wire is used to extend this distance. Compliance with OSHA requires the lockable service disconnect on the side of the MCE is within line of sight of the motor. Depending on installation, if installing more than 25 feet a load reactor my be required.

2.5 Shielded Motor Cable

To minimize electromagnetic interference and stray voltage, each Skyblade fan includes 25 feet of shielded motor cable, cable glands, and a variable frequency drive with a built-in filter. The shielded motor cable connects the motor and variable frequency drive. This shielded system reduces the likelihood of broadcasting and receiving electronic noise which can interfere with radio and other sensitive equipment. This shielded motor cable and the controller cable must be run in separate conduit at least 6 inches apart. Electrical interference and stray voltages are the liability of the installer and are not covered by SkyBlade under warranty.

2.6 Check Compliance with Federal, State, and Local Codes

Check all relevant codes to make sure product certifications, product listings, and building regulations are met. Code compliance is the responsibility of the installer.

3 MOUNTING CONSIDERATIONS

3.1 General Mounting

Each type of mounting system requires a specific mounting bracket. Most are available from Skyblade Fans. Check with the contractor, building owner, or architect to ensure the structure is sound and will support the weight of the fan before beginning installation. Skyblade Fans provides guidelines for mounting fans; however, it is the sole responsibility of the building owner and installer to ensure the safety of the mounting system, that the building structure is sound, and the installation complies with all federal, state, and local codes.

⚠ CAUTION/ATTENTION

When cutting or drilling into a wall or ceiling, take care not to damage electrical wiring or other utilities.

Lorsque vous coupez ou percez un mur ou un plafond, prenez garde à ne pas endommager les fils électriques ou d'autres services publics.

Select a location that is free from obstructions that may interfere with the fan's operation.

Choisissez un emplacement qui est libre de tout obstacle pouvant interférer avec le fonctionnement du ventilateur.

3.2 Weight

A Standard 1-horsepower 16 foot 6-blade fan and mounting assembly weighs about 310 pounds. In inverted-blade applications designed to blow air upward, there is an additional downward force of about 80 pounds due to fan thrust. We recommend applying a safety factor of 2 times the stated hanging weight of the fan when determining the capabilities of the building structure.

3.3 Torque

The maximum torque that must be handed by the mounting system and the building structure will occur at the fans startup. For a 16 foot fan, maximum potential startup torque is 300 ft-lbs. Skyblade Fans use a soft-start technology which allows the rpm to ramp up as desired over 60 seconds. The event of this max torque being applied is unlikely and will only apply due to a failure of the variable frequency drive and its soft start technology.

3.4 Safety Cable

A Skyblade fan should never be run without proper installation of Safety Cables. These are supplied with every fan. You must install safety cable for warranty to be in effect.

3.5 Guy Wires

While in operation a fan can sway due to minor imbalance or because of wind. Since the mounting system is capable of swiveling, it will not stop fan movement, so it is important that the guy wires be installed properly. Proper installation includes the angle and tension of the guy wires. See page 22-23 for more information.

3.6 Universal Mounting Hardware

We recommend mounting the fan to a horizontal structural beam, however, this is not always possible in buildings with pitched roof construction. For this reason, our universal mounting system is designed to allow the fan to hang in a level position perpendicular to the ground by rotating the upper yoke 90 degrees.

4 PREPARING THE WORK SITE

4.1 Mechanical Installation

A 24' (7.3m) STOL fan (our largest model) weighs, at maximum, 310 lbs (140kg). A scissor lift, or other suitable means for lifting and a minimum of two installation personnel, will be required.

Skyblade Fans can be hung from an I-beam, angle irons, or unistrut. See installation instructions on the following page. Do not mount the fan to single purlins, trusses, or bar joists. Consult a structural engineer for installation methods not covered in the manual.

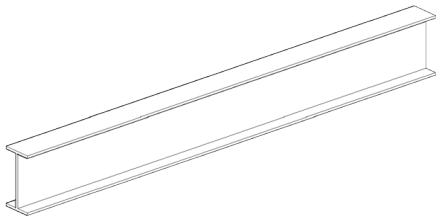

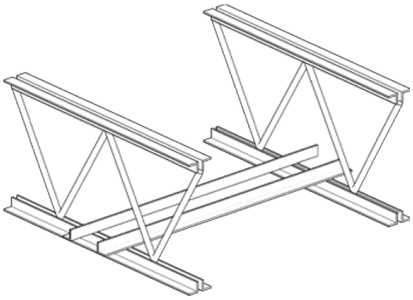

⚠ CAUTION/ATTENTION

To reduce the risk of injury to persons, install the fan so that the blade(s) is at least 10 feet (3.05 meters) above the floor.

Pour réduire le risque de blessures, installez le ventilateur de sorte que la lame (s) est d'au moins 10 pieds (3,05 mètres) au-dessus du sol.

The fan installation area and path must be free of obstructions such as lights, cables, sprinklers, or other building structure. We strongly recommend not mounting the fan closer than 15% of its diameter to any object or its path.

Do not install the fan where it will be continuously subjected to high winds (ex. Under a high velocity HVAC system). Allow a required 2x the fans diameter between the fan and the HVAC (or other air-moving) equipment when measured from the center of the fan to the equipment.

The spacing between multiple fans should be no less than 2.5x the fans diameter when measured from the center of the fans.

The mounting structure must be able to withstand the torque which is generated by the fan. A 20' diameter fan generates a maximum of nearly 300 ft-lb (406.7 N-m) of torque during operation.

4.2 Electrical Installation

To reduce the risk of electrical shock, wiring should be performed by a qualified electrician. Incorrect assembly can cause electric shock or damage the motor and controller.

The installation of a Skyblade Fan must comply with the National Electrical Code, ANSI/NFPA 70-1999, and all local codes.

All unused conductors that share conduit with the AC supply feeds must be grounded on both ends.

If required, a local disconnect should be installed per NEC and all local codes.

Refer to specifications on page 31 for appropriate circuit requirements.

Each fan requires dedicated branch circuit protection.

5 MOUNTING METHOD 1: I-BEAM

⚠ WARNING/AVERTISSEMENT

Support Directly From Building Structure.

All mounting instructions assume that the building structure from which the fan will be hung is of sound construction, undamaged, and capable of supporting loads of up to 650 lbs (295 kg). It is the sole responsibility of the customer to verify that the building's structure is adequate for fan installation. Skyblade Fans recommends consulting with a structural engineer prior to fan installation.

Aider directement à la structure du bâtiment.

Toutes les instructions de montage supposent que la structure du bâtiment à partir de laquelle le ventilateur sera pendu est de construction solide, en bon état, et capable de supporter des charges de jusqu'à 650 lb (295 kg). Il est de la seule responsabilité du client de vérifier que la structure du bâtiment est suffisante pour l'installation du ventilateur. Skyblade fans recommande de consulter un ingénieur en structure avant d'attiser installation.

⚠ CAUTION/ATTENTION

Install the "Clamping Shims" only if the thickness of the I-beam flange exceeds 3/8" (1cm). The mounting holes of the shim are closer to one side than the other. Make sure this side is facing the I-beam.

Installez les cales de serrage que si l'épaisseur de la semelle de la poutre supérieure à 3/8 "(1 cm). Les trous de fixation de la cale sont plus près d'un côté que de l'autre. Assurez-vous que ce côté est confronté à la poutre

5.1 Attach Upper Yoke (to I-Beam)

Measure the flange width of the I-beam you are wanting to hang the fan from. Compare the I-beam flange width to the diagram below to determine what mounting holes you will require.

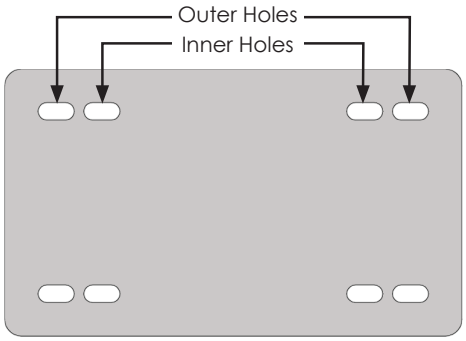

Secure the upper yoke to the I-beam with the "Clamping Plate" hardware shown below. Tighten the bolts to 90 ft-lb, (122 N-m) using a 3/4" socket and torque wrench.

Proceed to "Hanging the Fan" on pg. 20.

Clamping Plate Hardware (supplied):

a. (4) 1/2"-13x2.5" GR 5 Bolt
b. (8) 1/2" Flat Washer
c. (4) 1/2"-13 Nylock Nut
d. (2) Clamping Plate
e. (2) Clamping Shim

Upper Yoke
13-3/4" (45.7cm) x 8" (20.3cm)

I-Beam Flange Width	Upper Yoke Mounting Holes
5" (12.7cm) 8-3/8" (21.2cm)	inner holes
>8-3/8" (21.2cm) 9" (22.8cm)	outer holes

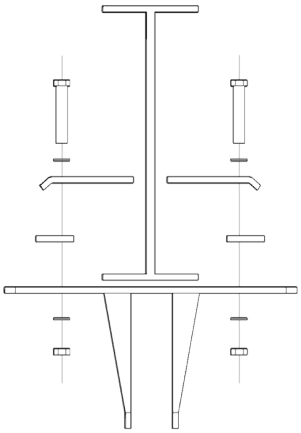

5 MOUNTING METHOD 2: ANGLE IRONS

⚠ WARNING/AVERTISSEMENT

Never use clamping plate or clamping shims when mounting the fan to angle irons!

Ne jamais utiliser la plaque de serrage ou des cales de serrage lors du montage du ventilateur à cornières!

Beam clamps are only intended for I-beam installations.

Serre-poutres sont uniquement destinées aux installations de faisceaux.

5.2 Select Proper Angle Irons:

NOTE: Angle Irons and angle iron hardware are not included with the fan.

⚠ CAUTION/ATTENTION

Do not install the fan from a single purlin, truss, or bar joist.

Ne pas installer le ventilateur à partir d'une seule panne, botte, ou solives.

Unsupported angle iron spans should not exceed 12' (3.7m).

Non pris en charge travées de fer d'angle ne doit pas dépasser 12 pi (3,7 m).

Do not install motor and hub assembly directly on angle iron.

Ne pas installer moteur et moyeu directement sur cornière.

Follow the table below when selecting angle irons for fan installation.

Angle Iron Span (between mounting point)	**Minimum Angle Iron Dimensions** (W x H x T)	**Qty. of Angle Irons Needed**
6' (1.8m) or less	2.5"(6.4cm) x 2.5"(6.4cm) x .25"(.6cm)	2
over 6' (1.8m) - 8' (2.4m)	3"(7.6cm) x 3"(7.6cm) x .25"(.6cm)	2
over 8' (2.4m) - 12' (3.7m)	3"(7.6cm) x 3"(7.6cm) x.25"(.6cm)	4*

**2 pairs of angle irons. Pairs should be placed back to back and fastened in center (see step 2).*

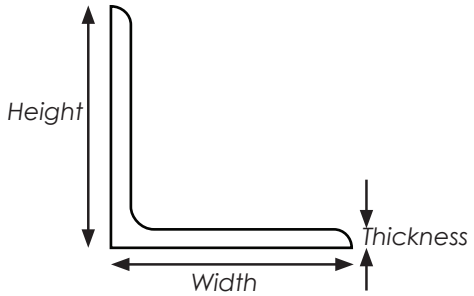

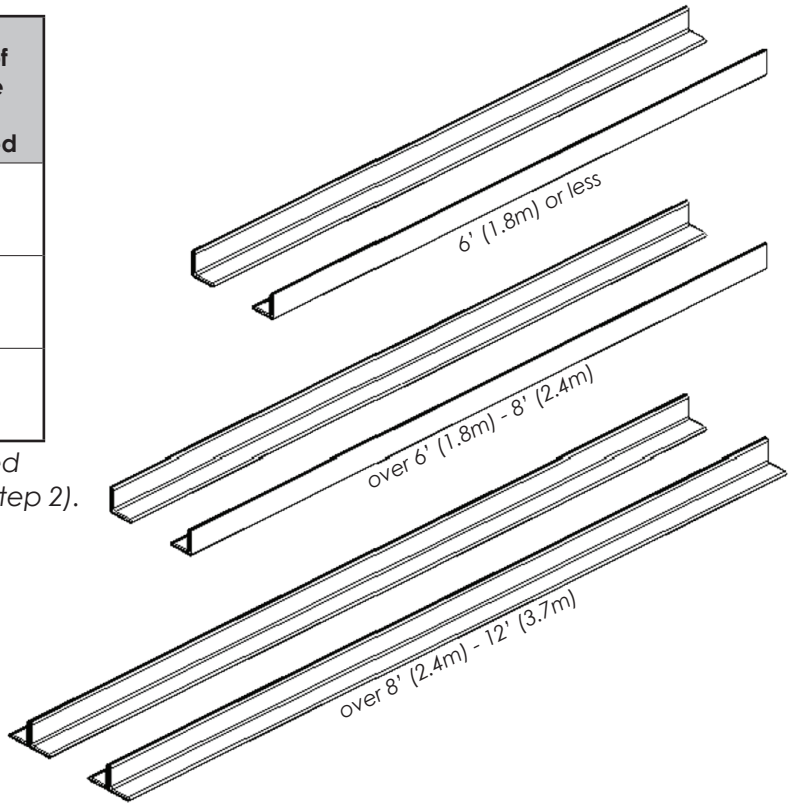

5 MOUNTING METHOD 2: ANGLE IRONS

5.3 Pre-Drill Angle Irons:

Drill two 9/16" (1.4cm) holes exactly 5-15/32" (13.8 cm) apart in the center of the two angle irons.

Measure the distance between the mounting points of the roof structure that the angle irons will span. Measure the same distance on the angle irons and drill 9/16" (1.4cm) diameter holes through each end of the angle irons. Drill holes in two angle irons if the span is 8' (2.4m) or less. Drill holes in 4 angle irons if span is greater than 8' (2.4m).

5.4. Fasten Angle Irons Together (if span is longer than 8')

If the angle iron span is 8' (2.4m) or less, proceed to step 5.5a on the following page.

If the angle iron span is longer than 8' (2.4m), it is necessary to use double angle irons.

Locate the center of the angle iron length. Drill 9/16" (1.4cm) diameter hole through the center of the vertical wall of the angle iron. Drilling through a total of four angle irons.

Place two drilled angle irons back to back. Fasten the angle irons together with customer supplied grade 5 hardware.

Align the angle irons to each other and tighten the bolts to 90 ft-lb (122 N-m) using a 3/4" socket with torque wrench.

Proceed to step 5.5b.

Grade 5 Hardware (customer supplied)

a. (2) 1/2"-13 GR 5 Bolt

b. (4) 1/2" Flat Washer

c. (2) 1/2" Nylock Nut

5 MOUNTING METHOD 2: ANGLE IRONS

5.5a Fasten Single Angle Iron to Roof Structure Mounting Points:

If installation requires double angle irons (i.e., span is greater than 8'(2.4m)), proceed to step 5.5b.

ATTENTION: Do not tighten the hardware until the upper yoke has been mounted to the angle irons.

⚠ CAUTION/ATTENTION

Do not install the fan from a single purlin, truss, or bar joist.

Ne pas installer le ventilateur à partir d'une même purlin, botte, ou solives.

The angle irons must be fastened to the roof structure at each end.

Les cornières doivent être attachés à la structure de toit à chaque extrémité.

Fasten the angle irons to the roof structure mounting points at each end with customer-supplied Grade 5 hardware as shown.

Fixer les cornières aux points de fixation de la structure du toit à chaque extrémité fourni par le client 5 e année du matériel comme indiqué.

Proceed to step 5.6.

Grade 5 Hardware (customer supplied):

a. (4) 1/2"-13 GR 5 Bolt

b. (8) 1/2" Flat Washer

c. (4) 2-1/2" Square Washer (see diagram)

d. (4) 1/2" Nylock Nut

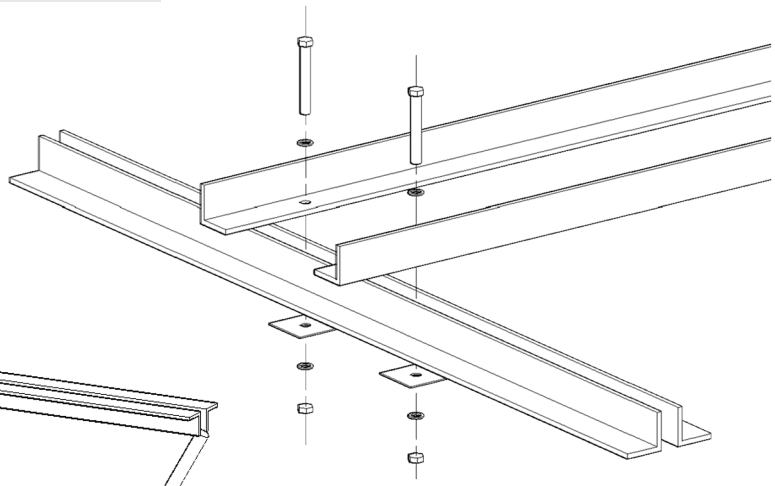

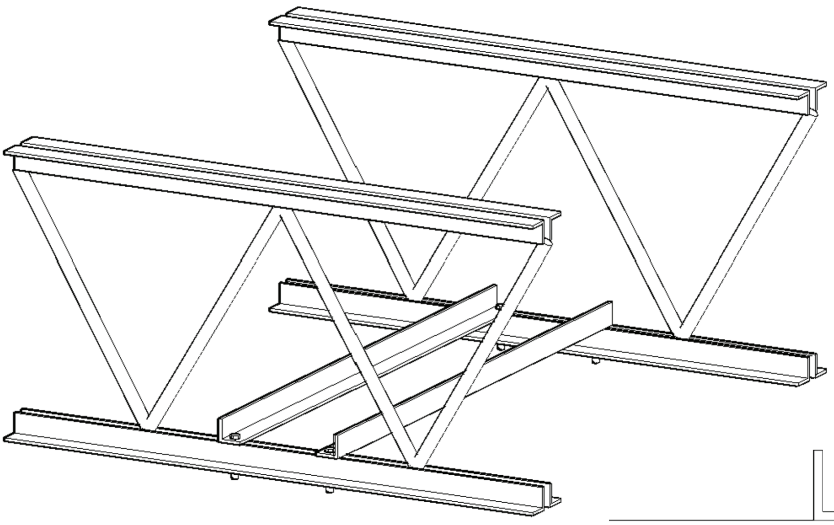

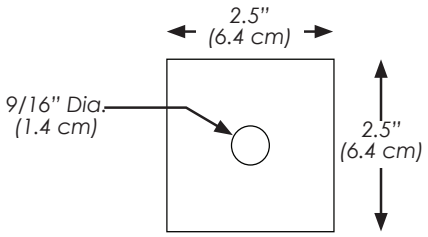

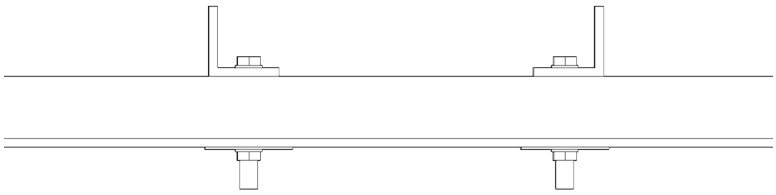

5 MOUNTING METHOD 2: ANGLE IRONS

5.5b Fasten Double Angle Irons to Roof Structure Mounting Points:

ATTENTION: Do not tighten the hardware until the upper yoke has been mounted to the angle irons.

⚠ CAUTION/ATTENTION

Do not install the fan from a single purlin, truss, or bar joist.

Ne pas installer le ventilateur à partir d'une même purlin, botte, ou solives.

The angle irons must be fastened to the roof structure at each end.

Les cornières doivent être attachés à la structure de toit à chaque extrémité.

Fasten the angle irons to the roof structure mounting points at each end with customer-supplied Grade 8 hardware as shown.

Fixer les cornières à la structure du toit de points de fixation à chaque extrémité fourni par le client matérielle la 8e année, comme illustré.

Proceed to step 5.6.

Grade 5 Hardware (customer supplied):

a. (4) 1/2"-13 GR 5 Bolt

b. (8) 1/2" Flat Washer

c. (4) 2-1/2" Square Washer (see diagram)

d. (4) 1/2" Nylock Nut

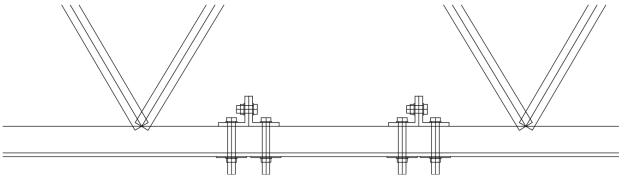

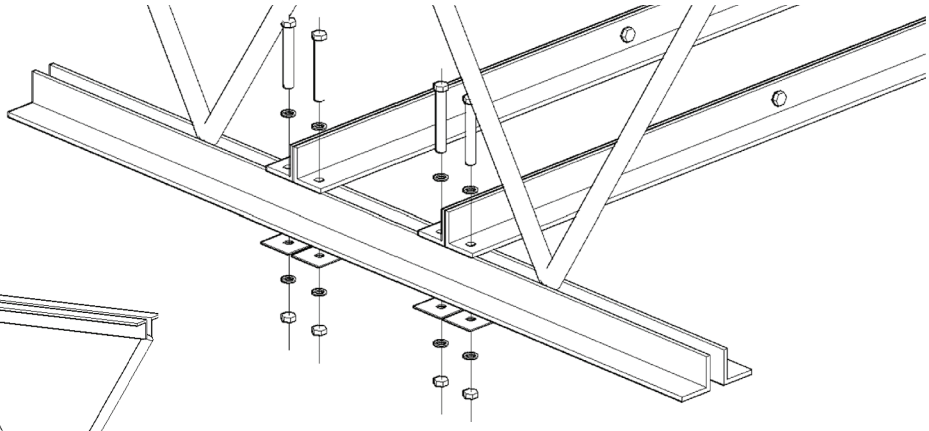

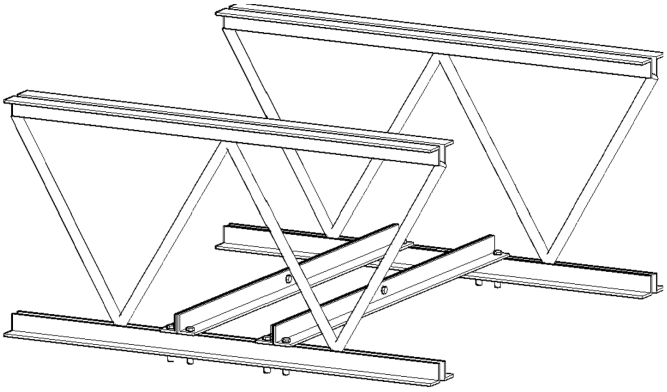

5 MOUNTING METHOD 2: ANGLE IRONS

5.6 Attach Upper Yoke (to Angle Iron):

Secure the upper yoke directly to the angle irons with the Beam Clamp hardware as depicted below. Consult the diagrams below for distances between the angle irons. Do not install the fan from a single purlin, truss, or bar joist.

Tighten bolts to 90 ft-lb (122 N-m) using a 3/4" socket and torque wrench.

⚠ CAUTION/ATTENTION

The angle irons should be aligned with the outermost holes of the upper yoke.

Les cornières devraient être alignées avec les trous extérieurs de la culasse supérieur.

After attaching upper yoke to the angle irons, tighten all the bolts securing the angle irons to the roof structure to 90 ft-lb (122 N-m) using a 3/4" socket with torque wrench.

Après l'avoir fixée culasse supérieure aux cornières, serrer tous les boulons de fixation des cornières à la structure du toit à 90 lb-pi (122 Nm) avec une "prise 3/4 avec une clé dynamométrique.

Beam Clamp Hardware (supplied):

a. (4) 1/2"-13x2-1/2" GR 5 Bolt

b. (8) 1/2" Flat Washer

c. (4) 1/2"-13 Nylock Nut

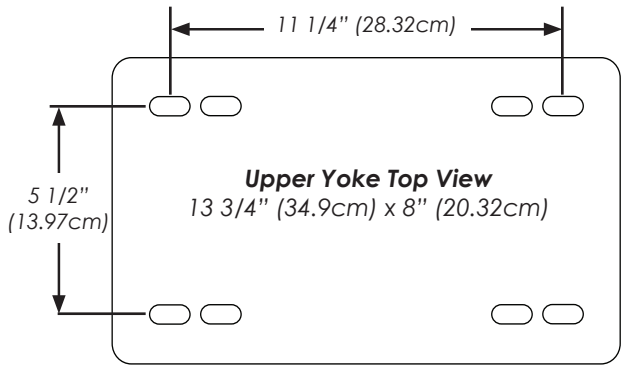

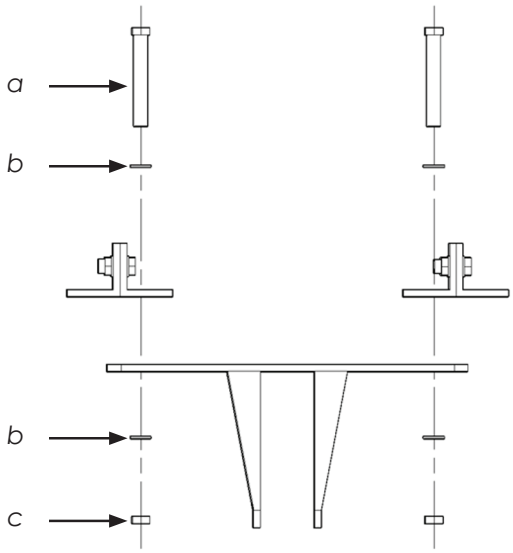

Upper Yoke Side View

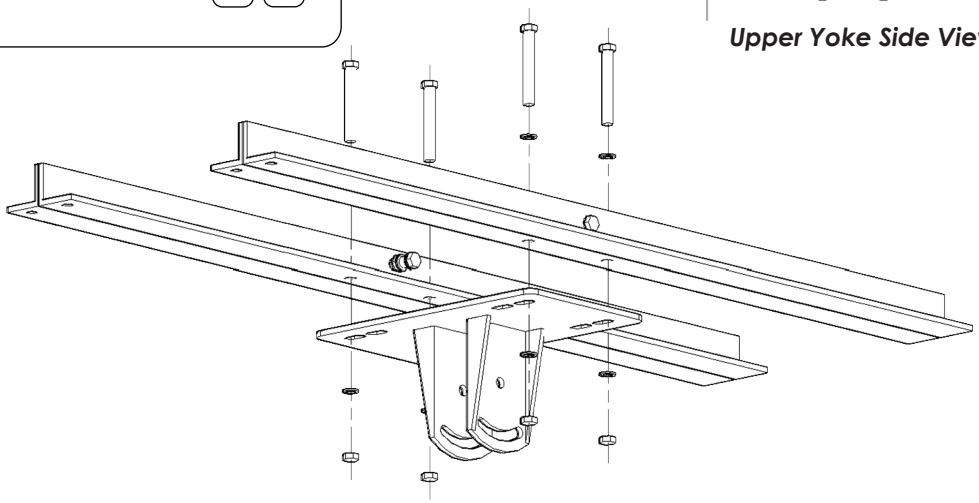

5 MOUNTING METHOD 3: PURLINS

NOTE: Purlin brackets and hardware are available from SkyBlade Fan Company upon request and not included standard.

5.7 Selecting Proper Angle Irons

Select the proper angle irons based on the requirements stated under section 5.2.

5.8 Pre-Drill Purlins

Drill four 9/16" (1.4 cm) diameter holes centered vertically along the purlin spaced apart 4.5" (11.4 cm) horizontally and 1.5" (3.8 cm) vertically. These holes should match up perfectly with those of the purlin bracket and back plate.

5.9 Attach Brackets and Backing Plates

Purlin mounting brackets and backing plates should be attached using the provided 1/2" grade 5 bolts, washers, and nylock nuts. A washer should be placed on both sides of the plate for each bolt.

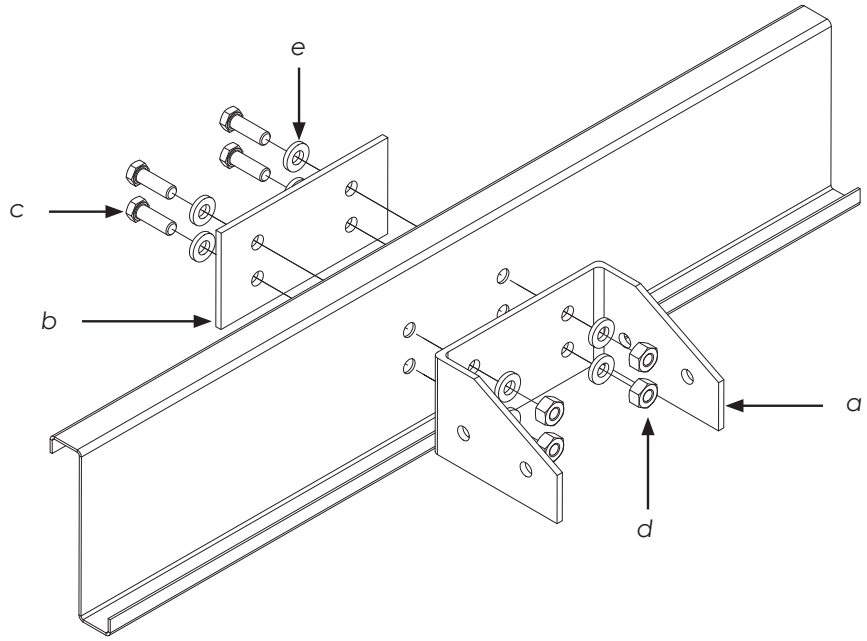

5.10 Pre-Drill Angle Iron Brackets Holes

Your angle iron should be cut to allow 1/2" (1.27 cm) clearance between the end of the angle iron and the purlin you are mounting to. Drill one 9/16" (1.4 cm) diameter hole centered vertically exactly 1" (2.54 cm) from the edge on both ends of the vertical wall of the angle iron. Drill a second hole exactly 3" (7.6 cm) inward from the first hole on both ends. Repeat for the second angle iron. These holes will be used to secure the angle iron to the purlin bracket with the provided hardware.

5.11 Pre-Drill Angle Iron Fan Mounting Holes

Measure the distance between the mounting points that each angle iron will span. Drill two 9/16" (1.4 cm) diameter holes centered on the bottom wall of each angle iron. The two holes should be spaced 5.5" (13.9 cm) apart to best match those of the upper yolk. These holes will attach the upper yolk to the angle iron.

5 MOUNTING METHOD 3: PURLINS

5.12 Mount Angle Iron

Attach the angle irons to the brackets using the provided 1/2" grade 5 bolts, washers, and nylock nuts. The angle irons must be facing outward secured to the outside faces of the purlin brackets.

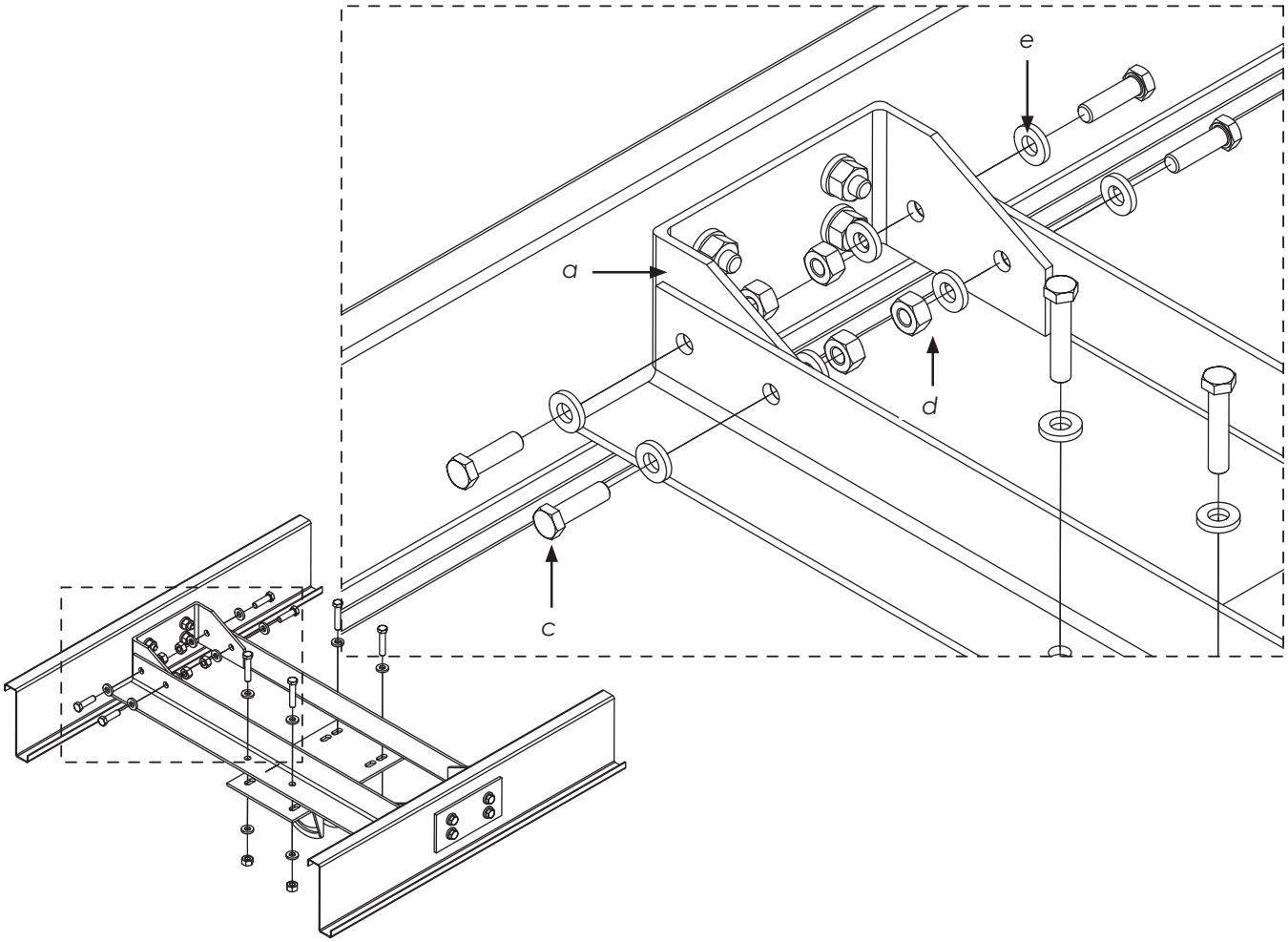

5.13 Attach Upper Yoke to Angle Iron

Attach the upper yolk to the angle irons using the provided 1/2" grade 5 bolts, washers, and nylock nuts. See section 5.6 "Attach Upper Yoke (to Angle Iron)" to continue installation.

Purlin Bracket Hardware (per set, supplied):

- **a.** (2) 1/4" Formed Steel Purlin Bracket
- **b.** (2) 1/4" Steel Purlin Backplate
- **c.** (16) 1/2"-13-1 3/4" GR 5 Bolt
- **d.** (16) 1/2" Nylock Nut
- **e.** (32) 1/2" Flat Washer

5 MOUNTING METHOD 4: UPPER TRUSS

⚠ WARNING/AVERTISSEMENT

Weight calculations must be done to select the proper size unistrut. Failure to do so may result in damages to the fan and building or even personal harm. Skyblade Fan Company is NOT liable for any damages or injury resulting from improper installation.

Calculs de masse doit être fait pour sélectionner le unistrut de taille appropriée. Défaut de le faire peut aboutir à dommages au ventilateur et de bâtiment ou même un préjudice personnel. Skyblade Fan Company est pas responsable de tout dommage ou blessure résultant d'une mauvaise installation.

It is the sole responsibility of the customer to verify that the building's structure and mounting assembly is adequate for fan installation. Skyblade Fans recommends consulting with a structural engineer prior to fan installation.

Il est de la seule responsabilité du client de vérifier que la structure du bâtiment et ensemble de montage est adéquat pour l'installation du ventilateur. Ventilateurs Skyblade recommande de consulter un ingénieur en structure avant l'installation du ventilateur.

5.14 Upper Open Web Joist Installation (Unistrut)

NOTE: Mounting materials located above the Upper Yolk are NOT included with the fan.

1. Install the 8" flat bar over the top chord of the web joist.

2. Install the threaded rod into the 8" flat bar, and install the washer and nut atop the threaded rod.

3. Weld the 1/2" nylock nut atop the threaded rod.

4. Repeat for all 8 rods.

5. Install the Unistrut with open sides facing up and the 8" flat bar beneath them onto threaded rods using 1/2" washers and 1/2"-13 nylock nuts thus sandwiching the top chord of the joist. Torque to 90 ft/lbs.

6. Route safety cable around the beam assembly and top chord of the joist at each mounting point. Secure safety cable using two wire rope clips on each cable.

7. Continue with fan mounting procedures in section 6.

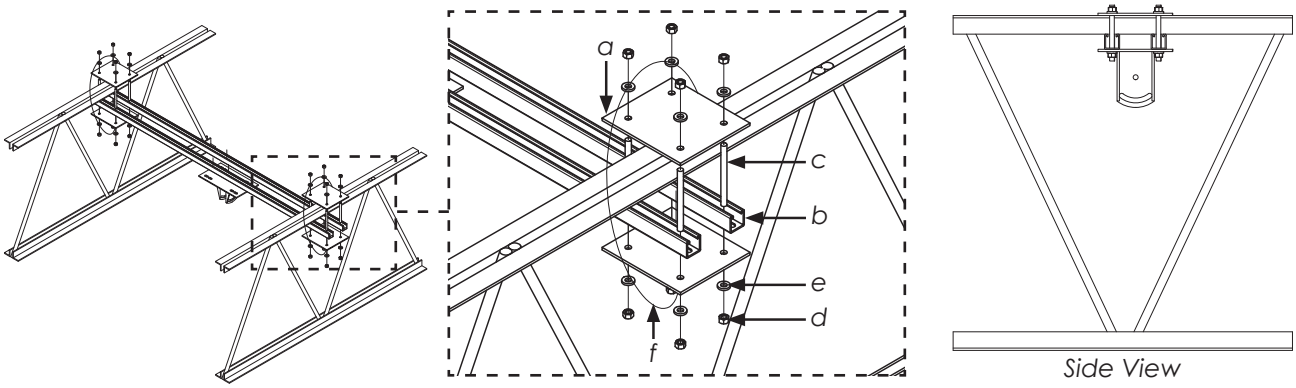

Parts List "Unistrut" (customer supplied):

a. (4) 8"x 9"x 1/4" Flat Steel Plates

b. (2) Unistrut Bars

c. (8) 1/2" Threaded Rods

d. (16) 1/2" Nylock Nuts

e. (16) 1/2" Washers

f. (2) Steel Safety Cables

g. (4) 1/8" Wire Rope Clips

5 MOUNTING METHOD 4: UPPER TRUSS

5.15 Upper Open Web Joist Installation (C Channel)

NOTE: Mounting materials located above the Upper Yolk are NOT included with the fan.

1. Install the 8" flat bar over the top chord of the web joist.

2. Install the threaded rod into the 8" flat bar, and install the washer and nylock nut atop the threaded rod.

3. Weld the 1/2" nylock nut atop the threaded rod.

4. Repeat for all 8 rods.

5. Install the C Channels with open sides facing away from each other onto threaded rods using 1/2" washers and 1/2"-13 nylock nuts thus sandwiching the top chord of the joist. Torque to 90 ft/lbs.

6. Route safety cable through a whole drilled in the beam assembly and above the top chord of the joist at each mounting point. Secure safety cable using two wire rope clips on each end of the cable.

7. Continue with fan mounting procedures in section 6.1.

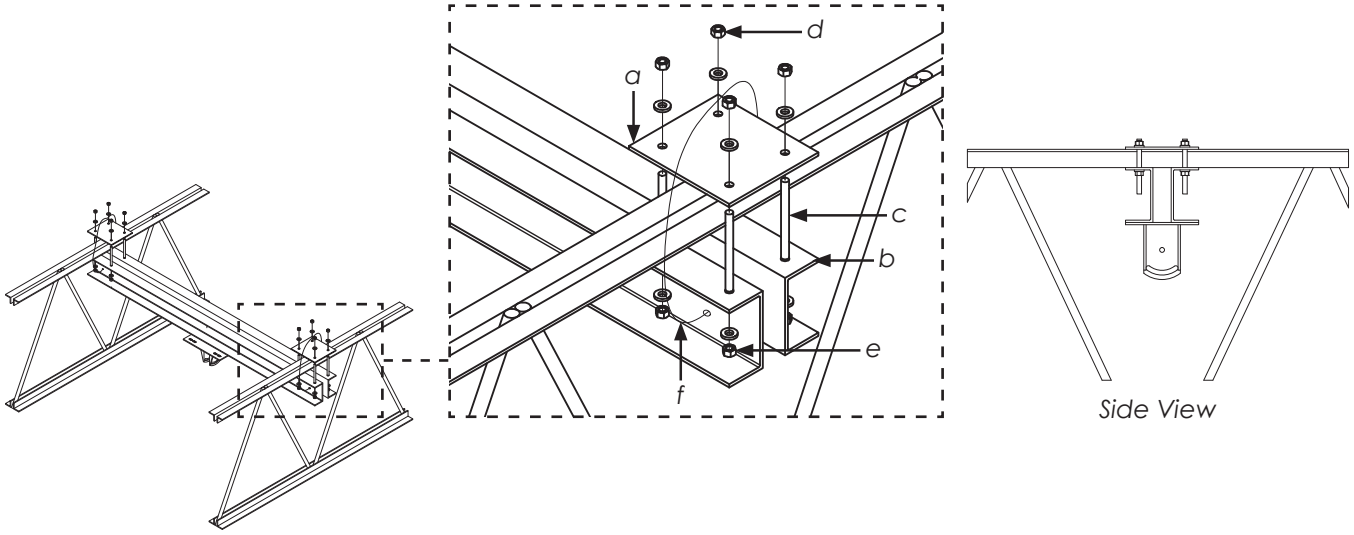

Parts List "C Channel"(customer supplied):

a. (2) 8"x 9"x 1/4" Flat Steel Plates
b. (2) 1/4" Steel C Channel Bars
c. (8) 1/2" Threaded Rods
d. (16) 1/2" Nylock Nuts
e. (16) 1/2" Washers
f. (2) Steel Safety Cables
g. (4) 1/8" Wire Rope Clips

6 HANGING THE FAN

Before installation all set screws **must** be checked, and tightened where necessary, before installation.

6.1 Attach Extension Tube (to Upper Yoke):

Attach the extension tube to the upper yoke with the hardware shown.

Before tightening the bolts, allow the fan to hang freely from the structure to allow the fan to rest perpendicularly from the floor.

Tighten bolts to 90 ft-lb (122 N-m) using a 3/4" socket and torque wrench.

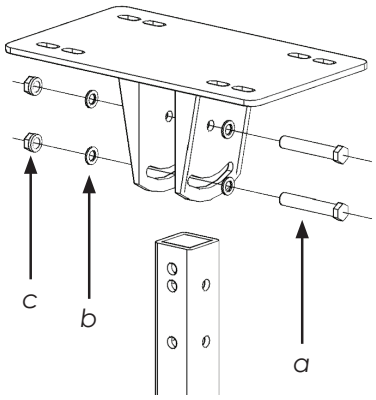

Single Pivot Hardware (supplied):

a. (2) 1/2"-13 x 3-1/2" GR 5 Bolt

b. (4) 1/2" Flat Washer

c. (2) 1/2"-13 Nylock Nut

⚠ WARNING/ AVERTISSEMENT

Failure to install fan ***both horizontally and vertically level*** will cause uneven wear in the motor and gearbox bearings which can lead to damage or a shortened lifespan. **Failure to install level will void manufacturer warranty**.

Le fait de ne pas installer le ventilateur ***à la fois horizontalement et verticalement*** entraînera une usure inégale du roulement du moteur et du roulement de la boîte de vitesses, ce qui peut entraîner des dommages ou une durée de vie raccourcie. **Ne pas installer le niveau annulera la garantie du fabricant.**

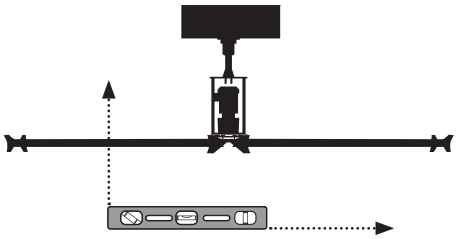

6.2 Secure Upper Safety Cable:

Secure the safety cable to the I-beam or angle iron by wrapping the safety cable around it, threading the cable through the 17/32" open hole on the top of the extension tube, and securing the ends with the gripple fastener as shown. The cable must have as little slack as possible. Securely tighten the gripple.

⚠ WARNING/ AVERTISSEMENT

The safety cable is a critical safety feature of the fan and must be installed correctly.

Le câble de sécurité est une caractéristique de sécurité essentielle de la soufflante qui doit être installé correctement.

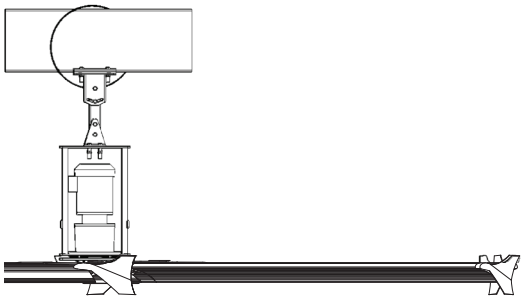

Cable End Detail

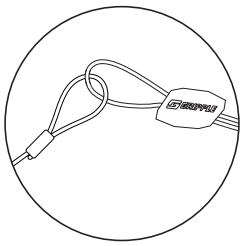

6.3 Attach Lower Yoke (to extension tube):

Attach the lower yoke to the bottom of the extension tube with the Lower Yoke Hardware as shown.

Tighten bolts to 90 ft. lbs. (122 N-m) using a 3/4" socket with torque wrench.

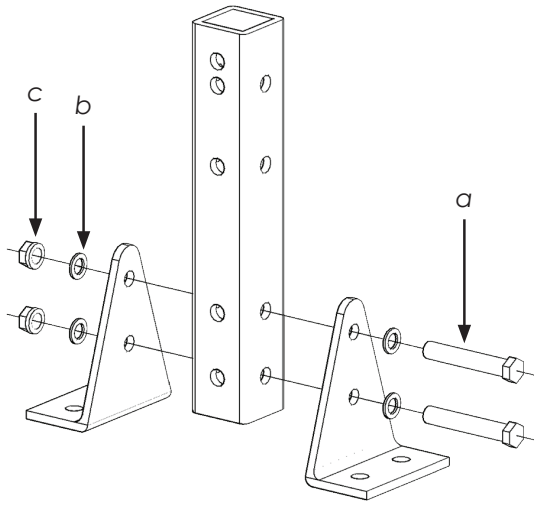

Lower Yoke Hardware (supplied):

- **a.** (2) 1/2"-13x3-1/2" GR 5 Bolt
- **b.** (4) 1/2" Flat Washer
- **c.** (2) 1/2"-13 Nylock Nut

6.4 Attach Motor Frame (to lower yoke)

⚠ CAUTION/ATTENTION

The Motor Frame is heavy, use a minimum of two persons when raising it.

Châssis du moteur est lourd, utiliser un minimum de deux personnes lors de l'élevant.

Attach the motor frame to the lower yoke with the Motor Hub Hardware as shown.

Tighten bolts to 90 ft. lbs. (122 N-m) using a 3/4" socket with torque wrench.

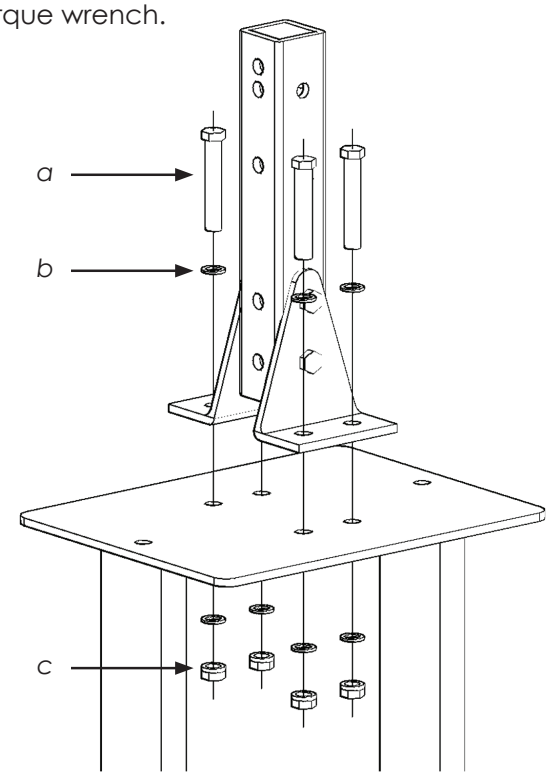

Motor Chassis Hardware (supplied):

- **a.** (4) 1/2"-13x1-1/2" GR 5 Bolt
- **b.** (8) 1/2" Flat Washer
- **c.** (4) 1/2"-13 Nylock Nut

7 INSTALLING GUY WIRES/GRIPPLE

7.1 Installing the Guy Wires:

IMPORTANT! Disregarding this step will void the manufacturer's warranty.

The use of four guy wires, with one gripple per wire is required. The angle formed by the guy wire and the ceiling must be less than 45 degrees from horizontal. Eye bolts (not supplied) are recommended to attach guy wires to the ceiling or beam.

Gripple Hardware Kit (supplied):

a. (4) 15' Wire Cables

b. (1) 5' Wire Cable

c. (5) Gripple Fasteners

It is recommended to use a level to confirm the fan is installed horizontal.

Use caution near sharp corners to avoid wear and/or fraying of the guy wires.

⚠ CAUTION/ATTENTION

Over-tightening the guy wires may cause the fan to become unbalanced.

Un serrage excessif des câbles de haubanage peut provoquer le ventilateur à devenir déséquilibré.

Guy wires should be spaced evenly around the fan and remain clear of the fan blade rotation path.

Les haubans espacer uniformément autour du ventilateur et restent dégagées de la voie de rotation de la pale de ventilateur.

Attach the guy wires to the ceiling or beam (reference Eye Hook illustration on page 23).

1. Slide the unlooped end of the guy wire through the eye hook.

2. Feed the wire through the loop on the other end of the wire.

3. Pull tight so the wire tightens on the eye hook.

Attach each guy wire to each loop on the lower section of the chassis.

1. Slide the gripple fastener (as supplied) over the opposite end of the wire.

2. Feed the end of the guy wire through the guy wire loop on the fan and then through the gripple, removing any slack from the cable.

7 INSTALLING GUY WIRES/GRIPPLE

When all of the guy wires are taut, trim the cables so no more than 3" extends from the gripple clamp.

⚠ WARNING/ AVERTISSEMENT

Make certain all electrical cords are not obstructed by guy wires.

Assurez-vous que tous les câbles électriques ne soient pas obstruées par des haubans.

Eye Hook

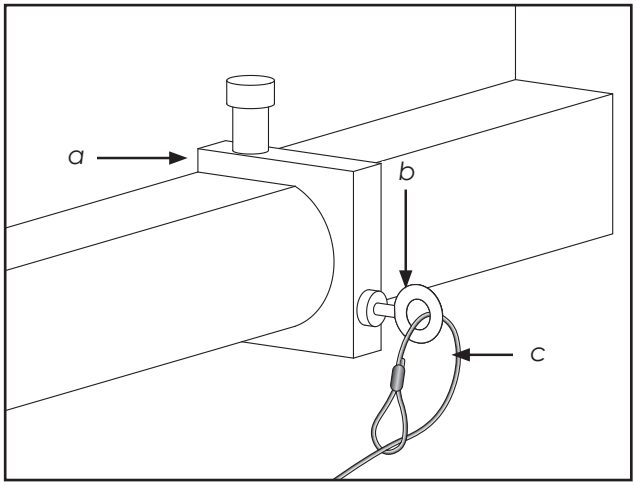

a Beam Clamp

b Eye Hook

c Gripple Wire Loop

Gripple

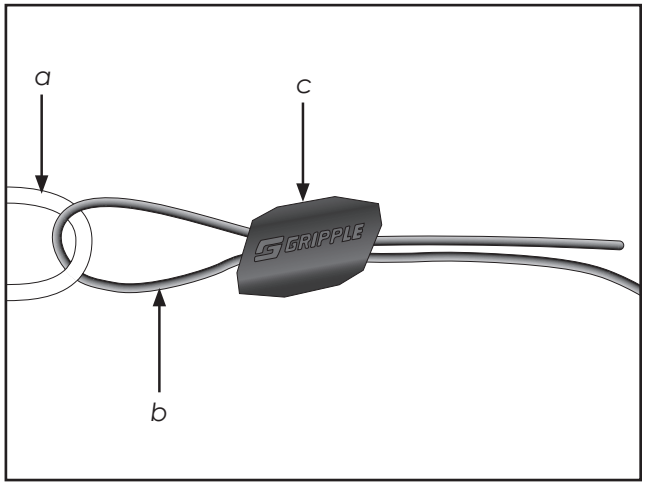

a Chassis Eye Hook

b Guy Wire

c Gripple Fastener

Gripple Maximum Angle

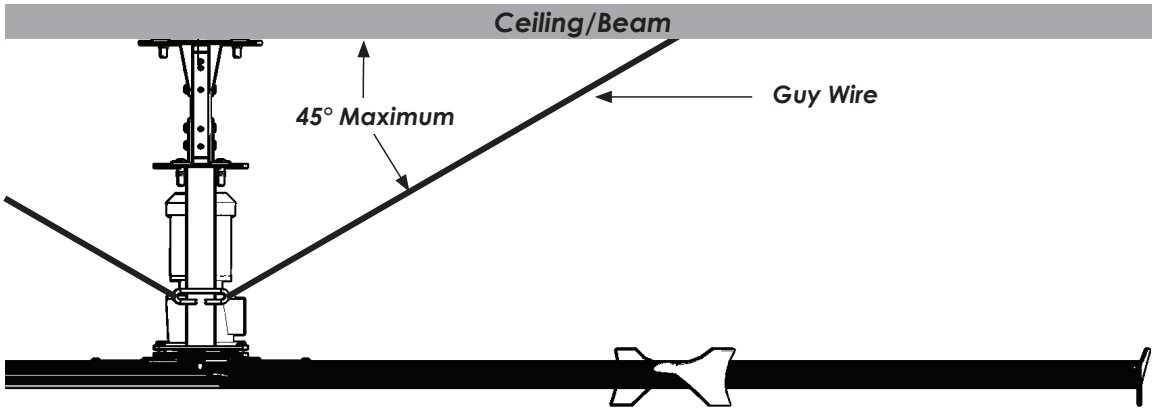

7 PRESSURE RELEASE VALVE

7.2 Pressure Relief Valve Installation

After fan installation, remove the hex plug from gearbox (a). Apply pipe dope or thread tape to both the elbow (b) and relief valve (c). Insert the elbow in to the gearbox and tighten down using vise grips or channel locks. Be sure the elbow is pointing in the upward position. Once the elbow is secure, inset the relief valve (c) in to the elbow (b) and tighten using a 9/16" (or 14mm) wrench. **Failure to install pressure relief valve will void manufacturer warranty**.

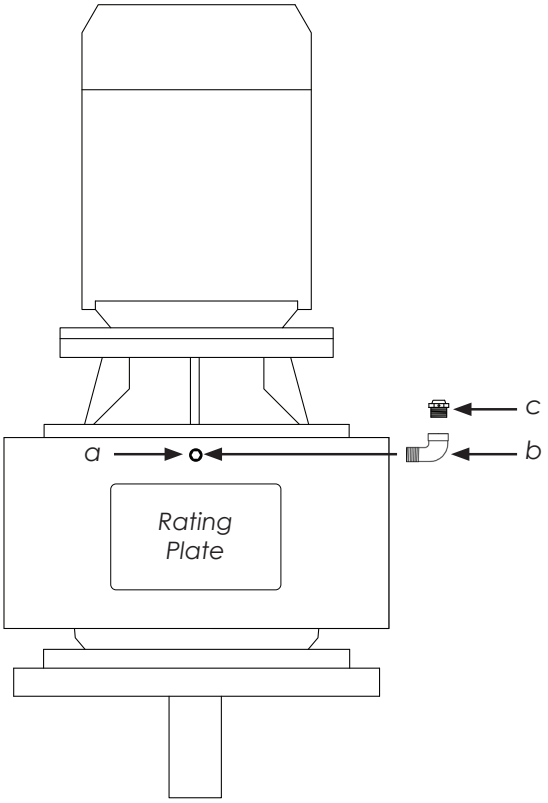

Pressure Release Valve Hardware (supplied):

a. Gearbox

b. Elbow

c. Pressure relief valve

ATTENTION: Failure to install the pressure relief valve could result in an oil leak from the gearbox seals and will void the SkyBlade warranty.

8 INSTALLING BLADES

⚠ WARNING/ AVERTISSEMENT

To reduce the risk of personal injury, do not bend the blade brackets when installing the brackets, balancing the blades, or cleaning the fan. Do not insert foreign objects in between rotating fan blades.

Pour réduire le risque de blessure, ne pas plier les crochets lame lors de l'installation les crochets, l'équilibre entre les lames, ou de nettoyer la ventilateur. Ne pas insérer d'objets étrangers entre les pales du ventilateur.

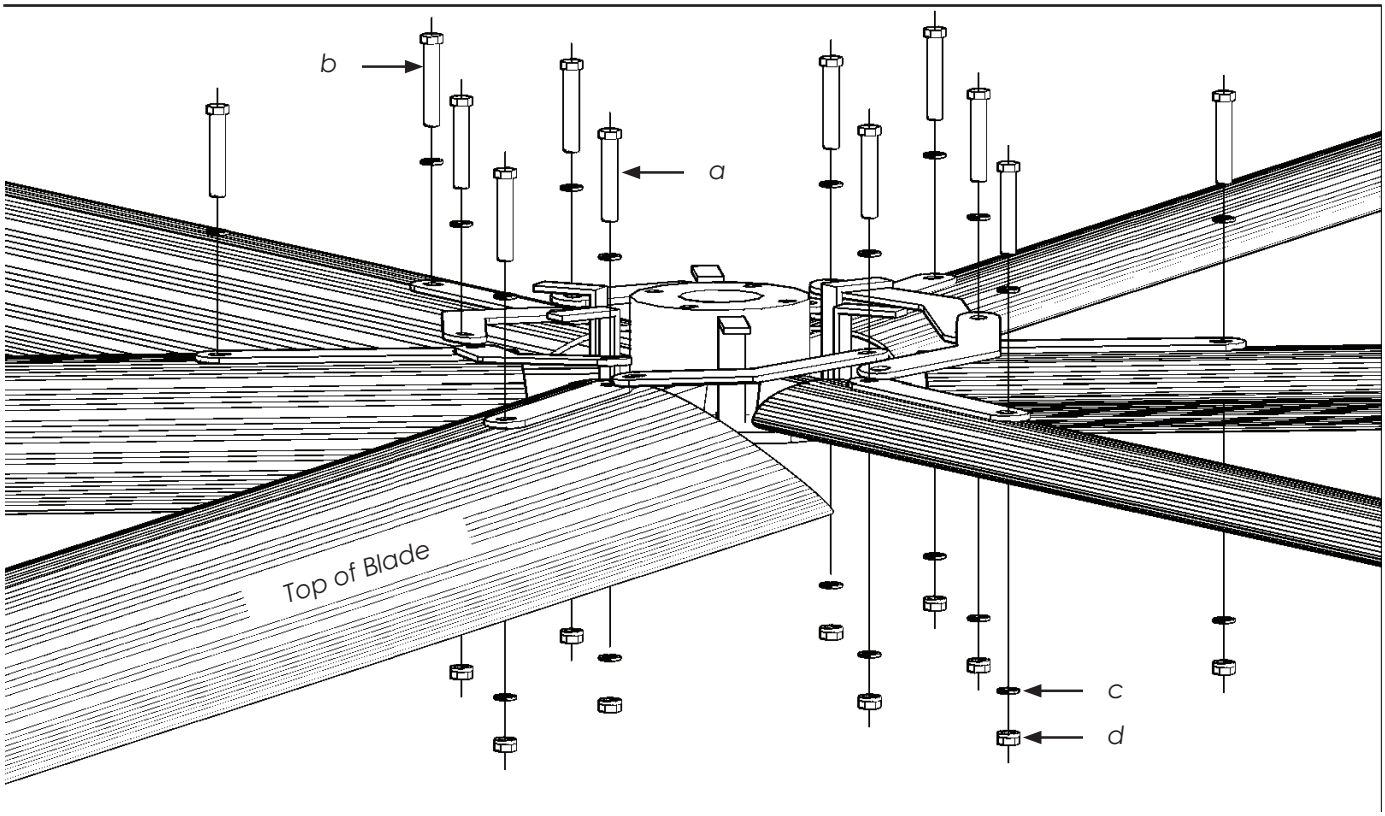

Blade Hardware Kit (supplied):

a. (6) 5/16"-24x2" GR 5 Bolt

b. (6) 5/16"-24x1-3/4" GR 5 Bolt

c. (24) 5/16" Zinc Flat Washer

d. (12) 5/16"-24 Nylock Nut

8 INSTALLING BLADES

8.1 Attach Blades to Hub:

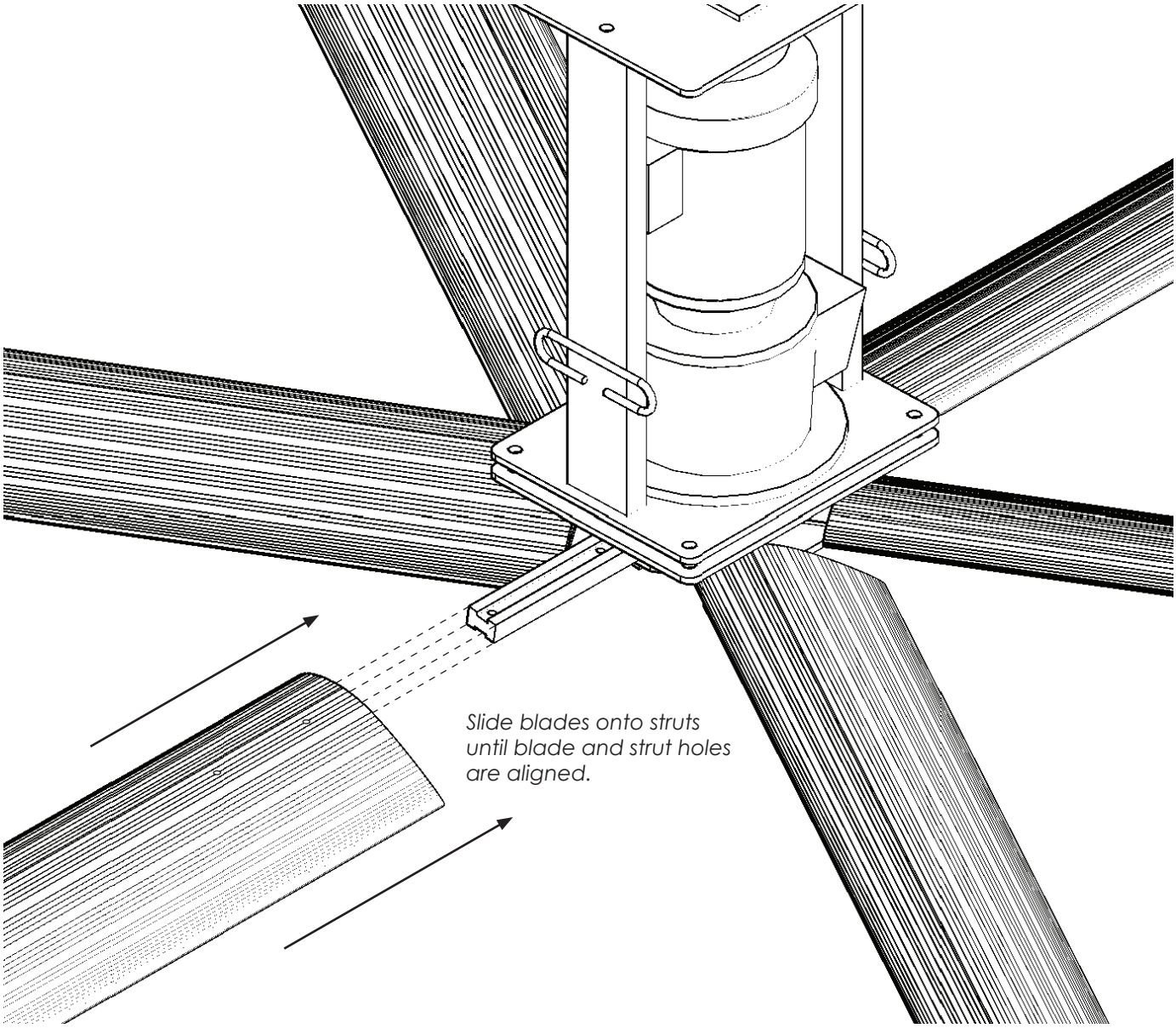

8 INSTALLING BLADES

8.2 Attach Boomerang Brackets:

⚠ WARNING/AVERTISSEMENT

Disconnect power to the motor before installing the blades.

Débranchez l'alimentation du moteur avant d'installer les lames.

Do not tighten the bolts until all the blade Boomerang Brackets are attached.

Ne serrez pas les boulons avant d'avoir fixé tous les supports de boomerang de lame.

Attach the Blade Boomerang Brackets using the Blades Hardware. Moving clockwise, position the Boomerang Brackets as specified.

Hole D & C rests on the blades.

Hole A should be positioned over Hole B with Hole C along the outside and Hole D towards the inside.

First, tighten the bolts along the outside to 29 ft-lb(39 N-m) using a 1/2" socket with torque wrench.

Second, tighten the bolts along the inside to 29 ft-lb(39 N-m) using a 1/2" socket with torque wrench.

Boomerang Bracket Kit (supplied):

a. (6) 5/16"-18x2" GR 5 Bolt

b. (6) 5/16"-18x1-3/4" GR 5 Bolt

c. (24) 5/16" Flat Washer

d. (12) 5/16"-18 Nylock Nut

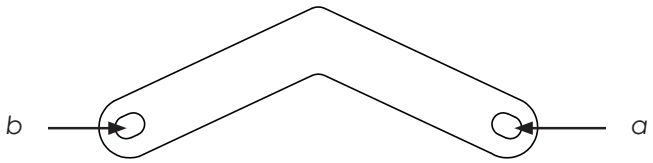

Blade Boomerang Brackets

Blade Straight Brackets

ATTENTION: Upon completion of the mechanical installation of the fan and before powering on, spin the fan around multiple times by hand to ensure all brackets are clear from contact with other parts on the fan. Thoroughly inspect the hub, the bolts and brackets within the hub to guarantee clear and proper rotation. If you find that the fan has a bracket that is hitting another object on the hub, contact SkyBlade Fan Company for a resolution.

8.3 Wingtip Assembly

Install wingtips on end of blade after blade has been securely attached to the strut. Using a Phillips-head screwdriver, fasten wingtip to blade using a #6 x 5/8" Flat Phil Screw.

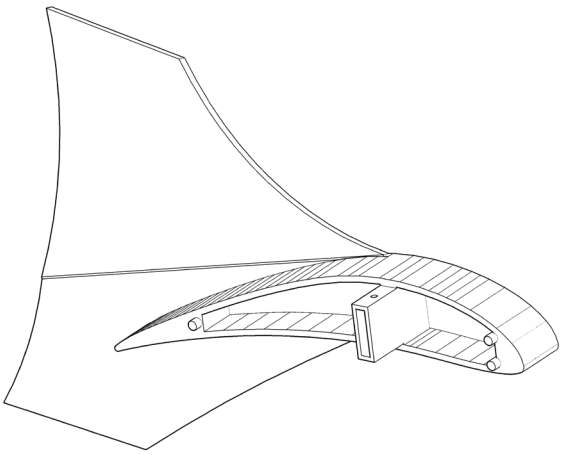

Wingtip

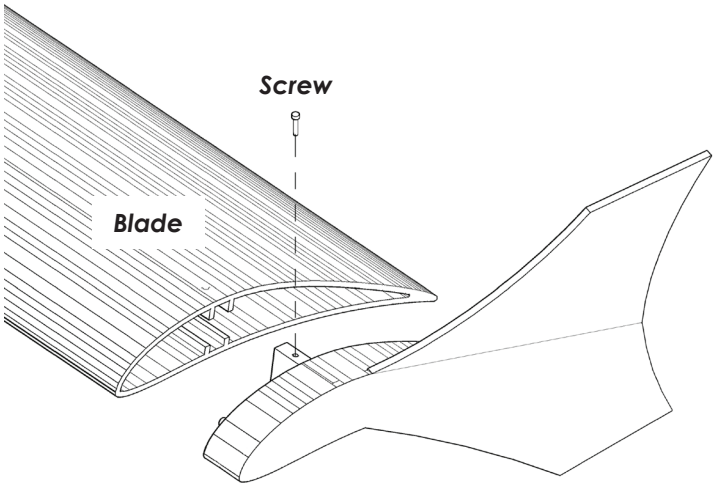

Wingtip

Wingtip Hardware Kit (supplied):

a. (6) #6 x 5/8" Flat Phil Screw

IMPORTANT: After installation is complete, replace plug on gear reducer elbow with pressure release valve provided by SkyBlade Fan Company. See section 7.2 – Pressure Relief Valve Installation.

8 INSTALLING MOTOR COVER

NOTE: <u>Motor cover and hardware are available from SkyBlade Fan Company upon request and are not included standard</u>.

8.4 Motor Cover Assembly

1. Orient the motor cover so that the three ventilation slots are on top.

2. Knock out the hole for the motor cable on the cover that is on the side of the motor electrical box.

3. Apply the plastic bushing to the knocked out hole.

4. Push the motor cable through the plastic bushing on the motor cover and on the motor electrical box.

5. Finish wiring the motor cable to the motor, screw on the motor electrical box cover and tighten the bushings.

6. Align the slots on the motor cover to the sockets in the chassis

7. Screw in the motor cover thumb screws and tighten with a 3/16" allen wrench.

8. On the non-electrical side, orient the cover so that the three ventilation slots are on top again.

9. Align the slots on the cover to the sockets on the chassis

10. Screw in the motor cover thumb screws and tighten with a 3/16" allen wrench.

Motor Cover Hardware (supplied):

a. (8) 1/4"-20x5/8" Thumb Socket Cap Screw

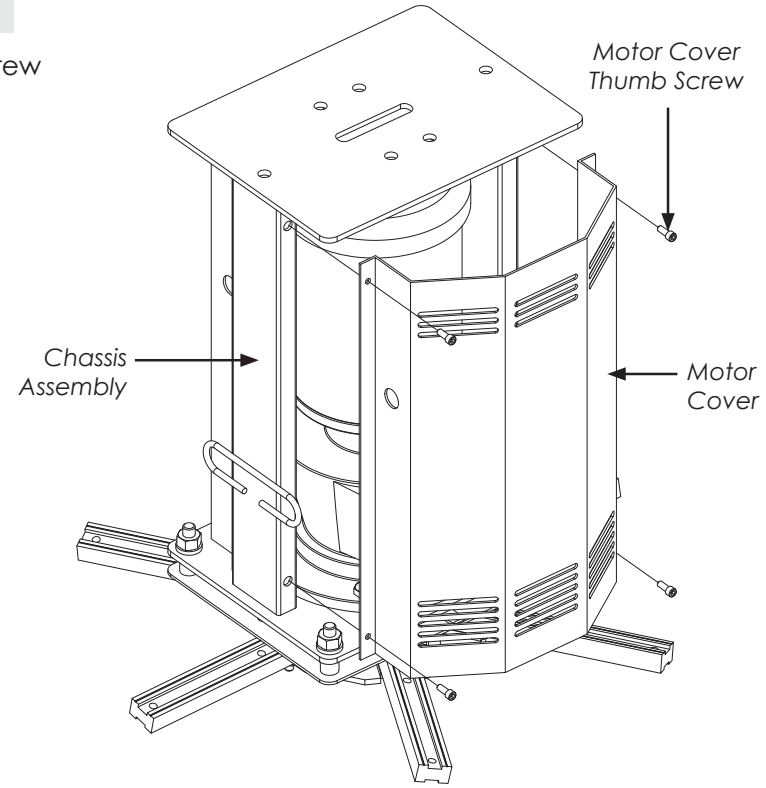

8 INSTALLING HUB COVER

The hub cover may or may not come from the factory pre-installed. In the event it is not installed, field installation is required. Follow section 8.5 to install the hub cover.

8.5 Hub Cover Assembly

1. Align the pre-installed threaded bolt on the hub cover with the threaded hole on the output shaft of the reducer.
2. Twist the entire hub cover to thread the bolt in to the hole. Spin until the hub cover is installed tight.
3. Remove the protective paper from the face of the hub cover.

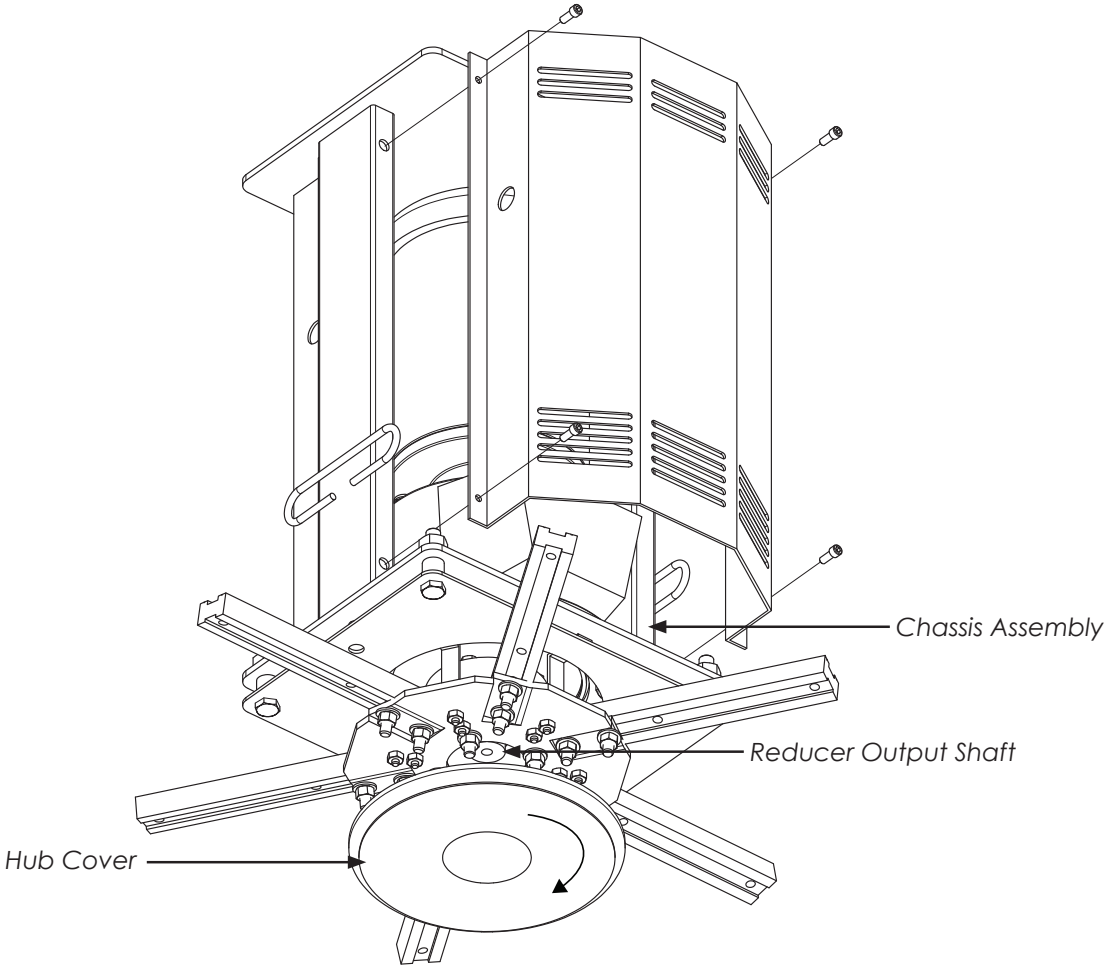

9 ELECTRICAL INSTALLATION

9.1 Power Requirements:

IMPORTANT: 4-wire WYE grounded power only! 277V power source will not be accepted. Any form of Delta configuration is not accepted.

INPUT VOLTAGE	INPUT (HZ)	INPUT/OUTPUT PHASE
99-126 / 110V	50 / 60 Hz	1/3 Phase
198-264 / 230V	50 / 60 Hz	1/3 Phase
198-264 / 230V	50 / 60 Hz	3/3 Phase
342-528 / 480V	50 / 60 Hz	3/3 Phase
450-660 / 575V	50 / 60 Hz	3/3 Phase

IMPORTANT: Check that the correct input voltage is being sent to the VFD. See labels inside VFD enclosure for acceptable voltage. A blown drive due to incorrect input voltage is NOT covered under SkyBlade warranty.

⚠ WARNING/AVERTISSEMENT

Motor cables and incoming power must never be run in the same conduit. Failure to install per SkyBlade Fans instructions, including wiring, may be hazardous, cause premature failure, and void the manufacturers warranty.

Les câbles moteur et de la puissance entrant ne doivent jamais être placés sur le même conduit. Ne pas installer par SkyBlade ventilateurs instructions, y compris le câblage, peut être dangereuse, entraîner une défaillance prématurée, et annulera la garantie du fabricant.

NOTICE

Motor comes pre-wired from factory for incoming 480 Volt 3 Phase power.

Notes/Remarques:

1. Fan should only be installed by qualified personnel in accordance with the NEC.
2. Proper grounding of panel and fan per the NEC is required for safety and proper operation.
3. Remote switch, remote cable, motor cable, and motor cable glands supplied by SkyBlade Fans.
4. Length of cable from drive to motor to be 25 feet or less.
5. Length of cable from controller to switch box to be 100 feet or less.
6. VFD cable must be ran in conduit or raceway per NEC. Câble VFD doit être exécuté dans un conduit ou chemin de roulement par NEC.
7. Each fan must be connected to separate circuit breakers.

This page for illustration purposes only. For all installations, refer to the control panel schematic packaged inside the MCP.

If fan does not rotate CCW when looking up, reverse rotation by interchanging the line leads between the motor and the Variable Frequency Drive.

After making wire connections, the wires should be spread apart with the grounded conductor and on one side of the outlet box and the ungrounded conductor on the other side of the outlet box. After splices are made, turn upward and carefully push up into the outlet box.

Supply Connections: Conductor of a fan identified as grounded conductor to be connected to an ungrounded conductor of power supply, conductor of fan identified for equipment grounding to be connected to an equipment grounding conductor.

9 ELECTRICAL INSTALLATION

⚠ WARNING/AVERTISSEMENT

ELECTRICAL SHOCK HAZARD.
RISQUE D'ÉLECTROCUTION.

To reduce the risk of electrical shock, wiring should be performed by a qualified electrician. Incorrect assembly can cause electrical shock or damage the motor and the controller.

Pour réduire le risque d'électrocution, le câblage doit être effectué par un électricien qualifié. Assemblage incorrect peut provoquer des chocs électrique ou endommager le moteur et le contrôleur.

To reduce the risk of fire or electrical shock, do not use this fan with any solid-state speed control device.

Pour réduire le risque d'incendie ou de choc électrique, ne pas utiliser ce ventilateur avec un dispositif de contrôle de vitesse à l'état solide.

The installation of a SkyBlade Fan must be in accordance with the National Electrical Code, ANSI/NFPA 70-1999, and all local codes. The procedures and techniques outlined in this manual are merely a guide for proper installation. Code compliance is YOUR responsibility. Failure to comply with these codes could result in personal injury or property damage.

L'installation d'un ventilateur SkyBlade doit être en conformité avec le National Electrical Code, ANSI / NFPA 70-1999, et tous les codes locaux. Les procédures et les techniques décrites dans ce manuel sont seulement un guide pour une installation correcte. Respect du Code est de VOTRE responsabilité. Le non respect de ces codes peut entraîner des blessures ou des dommages matériels.

The fan controllers contain high voltage capacitors which continue to hold a charge after removal of its main supply. Before working on the fan controller, ensure isolation of mains supply from line inputs at the fan controllers disconnect (L1, L2, L3). Wait three (3) minutes for capacitors to discharge to safe voltage levels. Darkened display LEDs are NOT an indication of safe voltage levels. Failure to do so many result in personal injury or death. DO NOT DISASSEMBLE THE VARIABLE FREQUENCY DRIVE! Doing so greatly increases the risk of shock.

Les contrôleurs de ventilateur contiennent des condensateurs à haute tension qui continuent de à tenir la charge après le retrait de son alimentation principale. Avant de travailler sur le contrôleur de ventilateur, assurer un isolement de l'alimentation secteur à partir d'intrants ligne à l'contrôleurs fan de déconnexion (L1, L2, L3). Attendre trois (3) minutes pour condensateurs se déchargent à des niveaux de tension non dangereux. LED d'affichage sombres sont pas une indication des niveaux de tension non dangereux. Ne pas le faire beaucoup causer des blessures ou la mort. NE PAS DÉMONTER LA FRÉQUENCE VARIABLE DRIVE ! Cela augmente considérablement le risque de choc.

⚠ WARNING/AVERTISSEMENT

Exercise caution and common sense when powering the fan. Do not connect the fan to a damaged or hazardous power source. Do not attempt to resolve electrical malfunctions or failures on your own. Contact SkyBlade Fans at 1-586-806-5107 if you have any questions regarding electrical installation of this fan.

Faites preuve de prudence et de bon sens lorsque vous alimentez le ventilateur. Ne pas brancher le ventilateur à une source d'alimentation endommagé ou dangereux. Ne pas tenter de résoudre les dysfonctionnements électriques ou des échecs sur votre propre. Contactez SkyBlade fans au 1-586-806-5107 si vous avez des questions concernant l'installation électrique de ce ventilateur.

9 ELECTRICAL INSTALLATION

⚠ CAUTION/ATTENTION

RUNNING THE CONTROL WIRE.
EXÉCUTION DU FIL DE CONTRÔLE

If using a AutoPilot or Radar Multi-Fan Controller, the fans are required to be installed and wired in sequential order according to serial number.

Si vous utilisez un pilote automatique ou un contrôleur radar multi-ventilateurs, les ventilateurs doivent être installés et câblés dans un ordre séquentiel selon le numéro de série.

⚠ CAUTION/ATTENTION

An incorrectly installed controller can result in component damage or reduction in the fan's life. Wiring or application errors such as under-sizing the controller, incorrect or inadequate AC supply, or excessive ambient temperatures may result in a malfunction of the fan system. Verify correct voltage, phase, and horsepower before beginning installation.

Un contrôleur mal installé peut entraîner des dégâts matériels ou la réduction de la durée de vie du ventilateur. Câblage ou d'application des erreurs telles que le sous-dimensionnement du contrôleur, une alimentation ca incorrecte ou inadaptée ou des températures ambiantes excessives peuvent provoquer un dysfonctionnement du système de ventilation. Vérifiez que la tension correcte, la phase et puissance avant de commencer l'installation.

⚠ WARNING/AVERTISSEMENT

This assembly produces leakage current exceeding 3.5mA and must be earthed using a protective conductor having a cross-sectional area of at least 10mm2 Cu or 16mm2 through its total run. This is to include all internal earthing connections between components and the supply.

Cet ensemble produit un courant de fuite supérieur à 3,5mA et doit être relié à la terre à l'aide d'un conducteur de protection ayant une aire de section transversale d'au moins 10mm2 Cu ou 16mm2 sur toute sa course. Il s'agit d'inclure toutes les connexions de mise à la terre internes entre les composants et l'alimentation.

⚠ CAUTION/ATTENTION

For use with manufacturer supplied variable frequency drive only.
Not for use with other speed control devices.
To avoid a short circuit, be very careful not to get metal chips in the control.
The SkyBlade Fan product warranty will not cover equipment damage or failure that is caused by improper installation.

Pour une utilisation avec le fabricant fourni entraînement à fréquence variable seulement.
Ne pas utiliser avec d'autres appareils de contrôle de vitesse.
Pour éviter un court-circuit, faire très attention de ne pas obtenir des copeaux de métal dans le contrôle.
La garantie des produits SkyBlade Fan ne couvrira pas les dommages à l'équipement ou de l'échec qui est causé par une mauvaise installation.

IMPORTANT: Check that the correct input voltage is being sent to the VFD. See labels inside VFD enclosure for acceptable voltage. A blown drive due to incorrect input voltage is NOT covered under SkyBlade warranty.

9.2 Wire Connection Procedure:

1. Strip the motor cable and twist the shield under the grounding clamp. Connect the phase conductors to the U2, V2, and W2 terminals. Use a tightening torque of 0.8 Nm. (7 lbf-in) for frame sizes R0...R2, 1.7 Nm (15lbf-in) for R3, and 2.5 Nm (22 lbf-in) for R4.

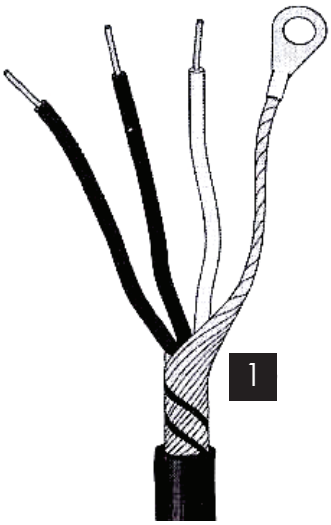

2. Secure the cables outside the drive mechanically.

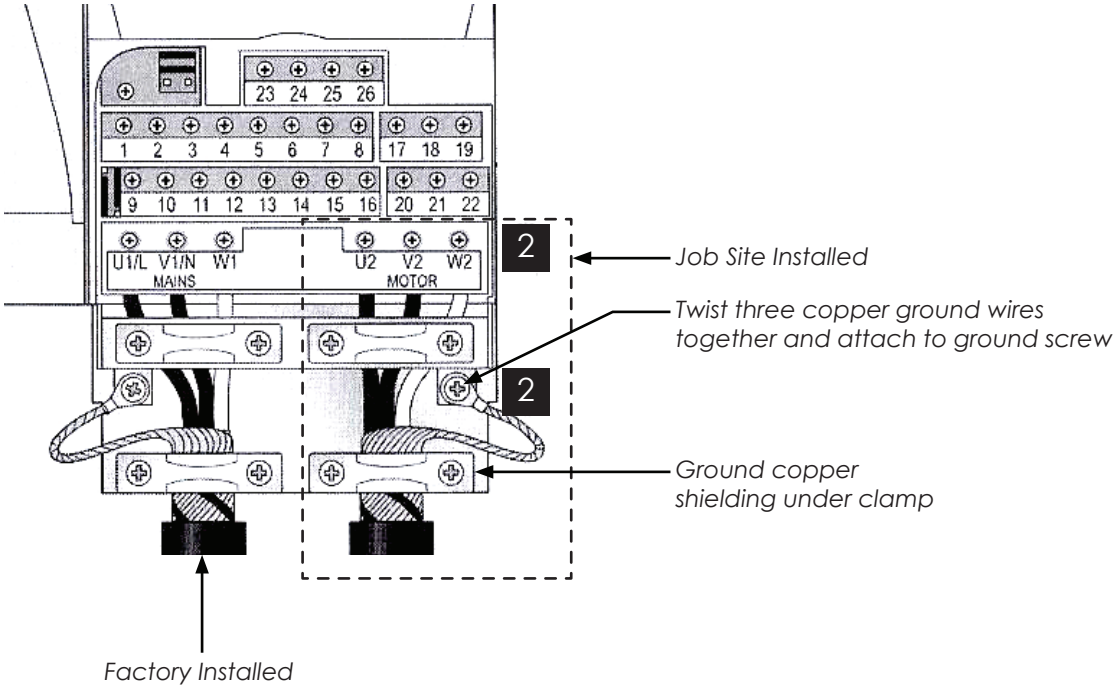

IMPORTANT: Grounding of one end of the shielding and both ends of the ground cable of the controller wire is required.

9.3 Running the Motor Wire

The SkyBlade STOL series' custom designed chassis makes for running the motor wire in an incognito fashion. The motor wire slot on the top of the chassis allows the power wire to be ran through (or affixed to the side) of the extension bar, then conveniently through the top plate of the chassis and directly in to the motor electrical box. See diagram below.

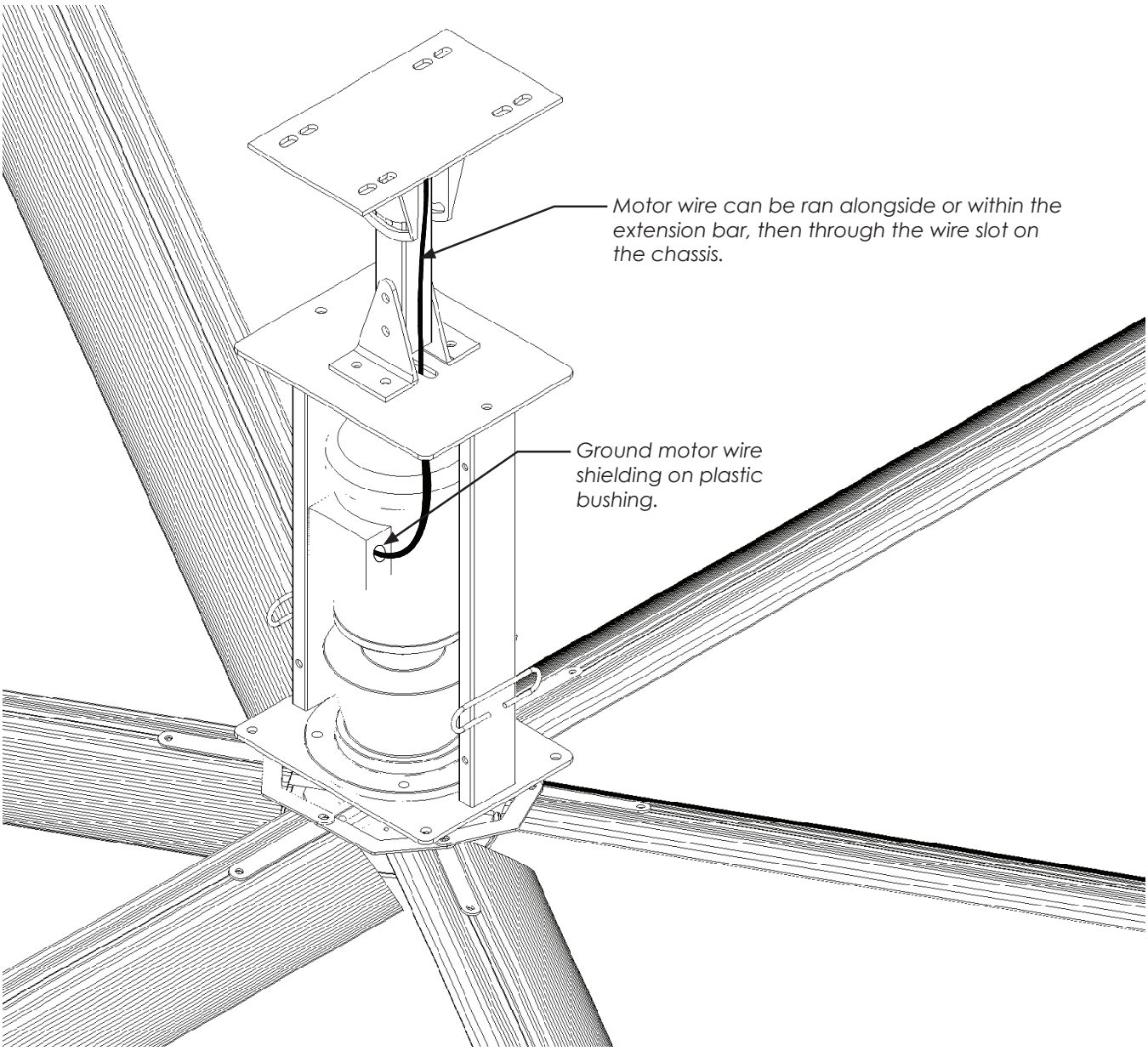

IMPORTANT: Grounding of the motor wire on the motor is required. Twist the three (3) ground strands of the motor wire together and ground under the dedicated grounding screw in the motor's electrical box. Confirm the motor wire is grounded at the VFD and motor.

9.4 Wiring to a Fire Alarm Panel

If the installation of the fan is required to be wired to a fire alarm emergency shut-off, the fire relay jumper cable on the VFD can be replaced and wired to a normally closed contact switch in the fire alarm panel for a quick and easy installation.

115V or 575V Applications:

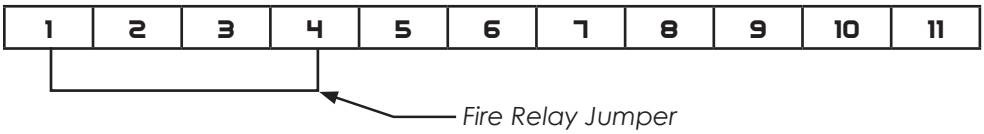

Remove the fire relay jumper. Using a 24V line, wire terminal 1 into the contact on the fire alarm panel. Next, wire the contact on the fire alarm panel back to terminal 4 on the drive so that a closed loop circuit is created between terminal 1, the fire alarm panel, and terminal 4.

230V or 460V Applications:

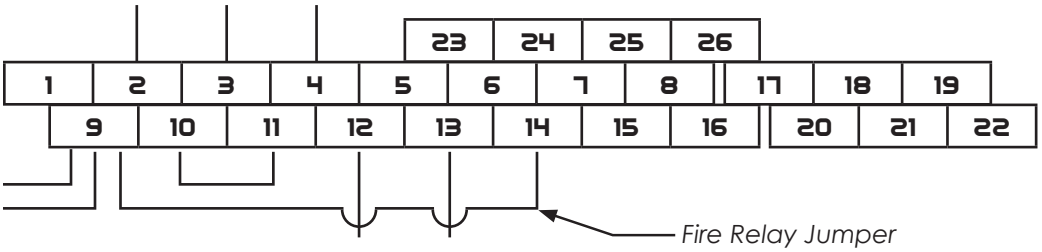

Remove the fire relay jumper. Using a 24V line, wire terminal 9 into the contact on the fire alarm panel. Next, wire the contact on the fire alarm panel back to terminal 14 on the drive so that a closed loop circuit is created between terminal 9, the fire alarm panel, and terminal 14.

If a normally closed contact is not available at the fire panel, then a relay switch will need to be introduced.
****An alarm code will appear on the VFD until contact between terminal 9 and 14 is made.****

The VFD is now programmed and wired so that whenever the fire alarm is activated, the VFD will automatically be shut off. To restart the fan, turn the controls to "OFF" and then back on to your desired setting.

For questions or comments regarding the fire alarm relay installation, contact SkyBlade Fan Company at 586-806-5107 during normal business hours.

9.5 Wiring the Motor

Low Voltage Applications (120V-1Ph, 230V-1Ph, and 230V-3Ph)

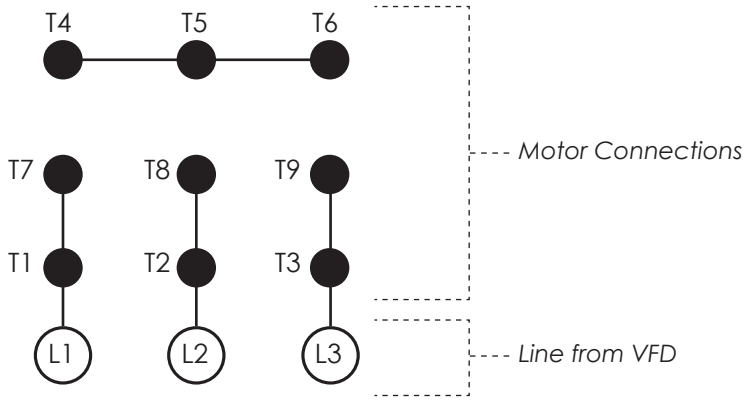

High Voltage Applications (460V-3Ph and 575V-3Ph)

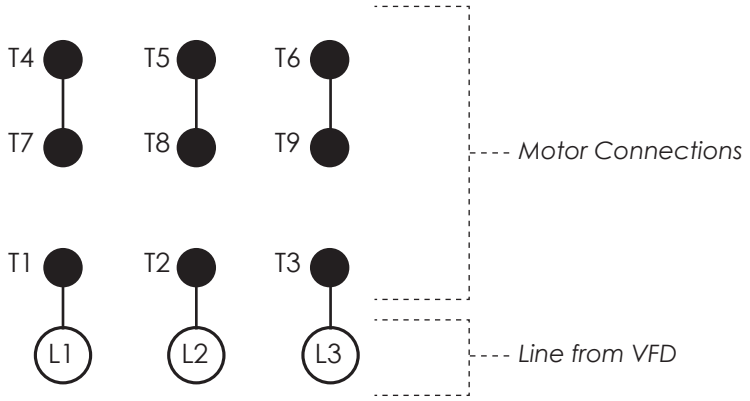

Wire Colors

T1 = Blue
T2 = White
T3 = Orange
T4 = Yellow
T5 = Black
T6 = Gray
T7 = Pink
T8 = Red
T9 = Brown/BRK Red

10 TROUBLESHOOTING

Electric Shock Hazard. Before attempting installation, servicing or cleaning unit, switch power off at the service panel and lock the service disconnecting means to prevent power from being switched on accidentally.

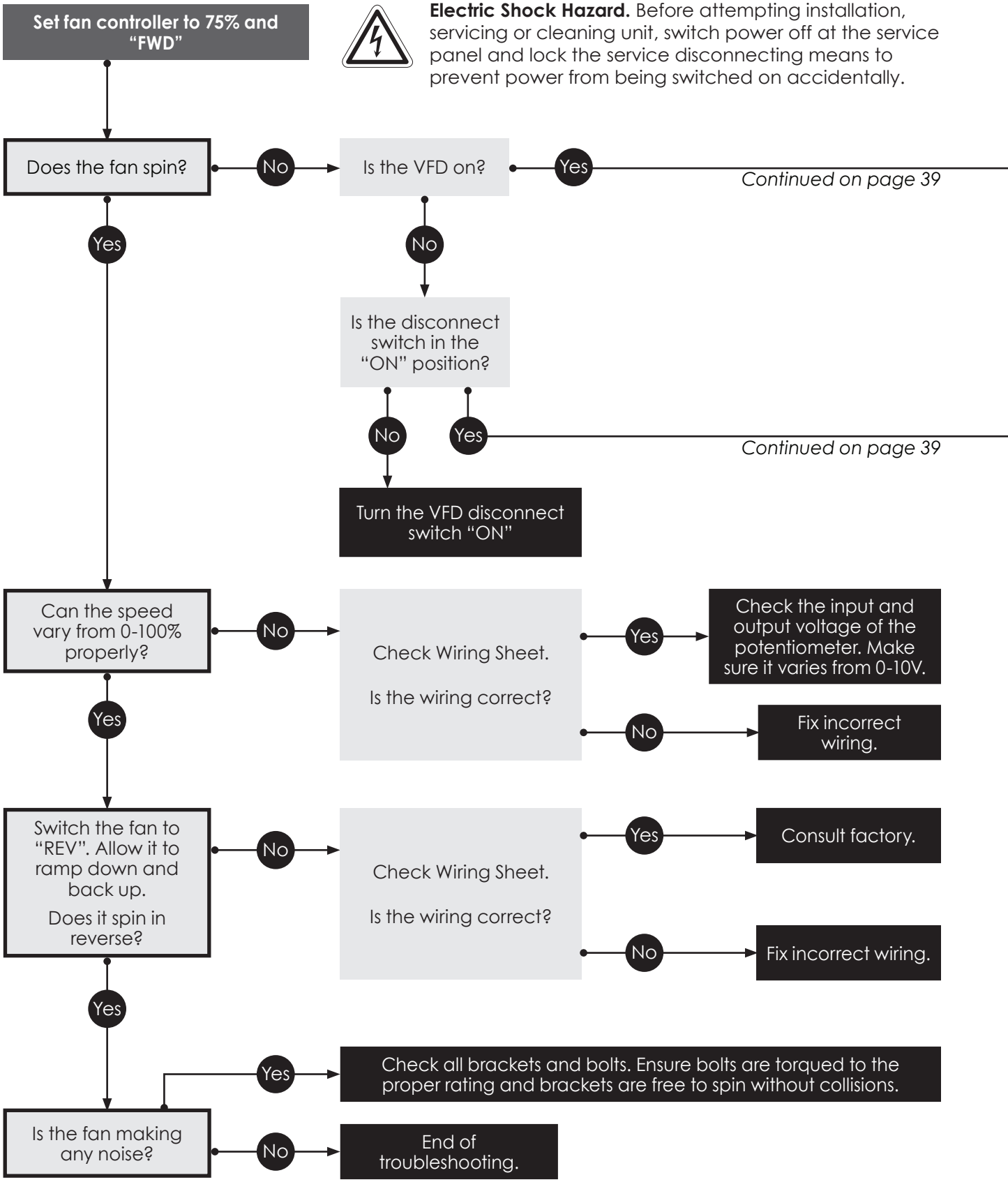

10 TROUBLESHOOTING

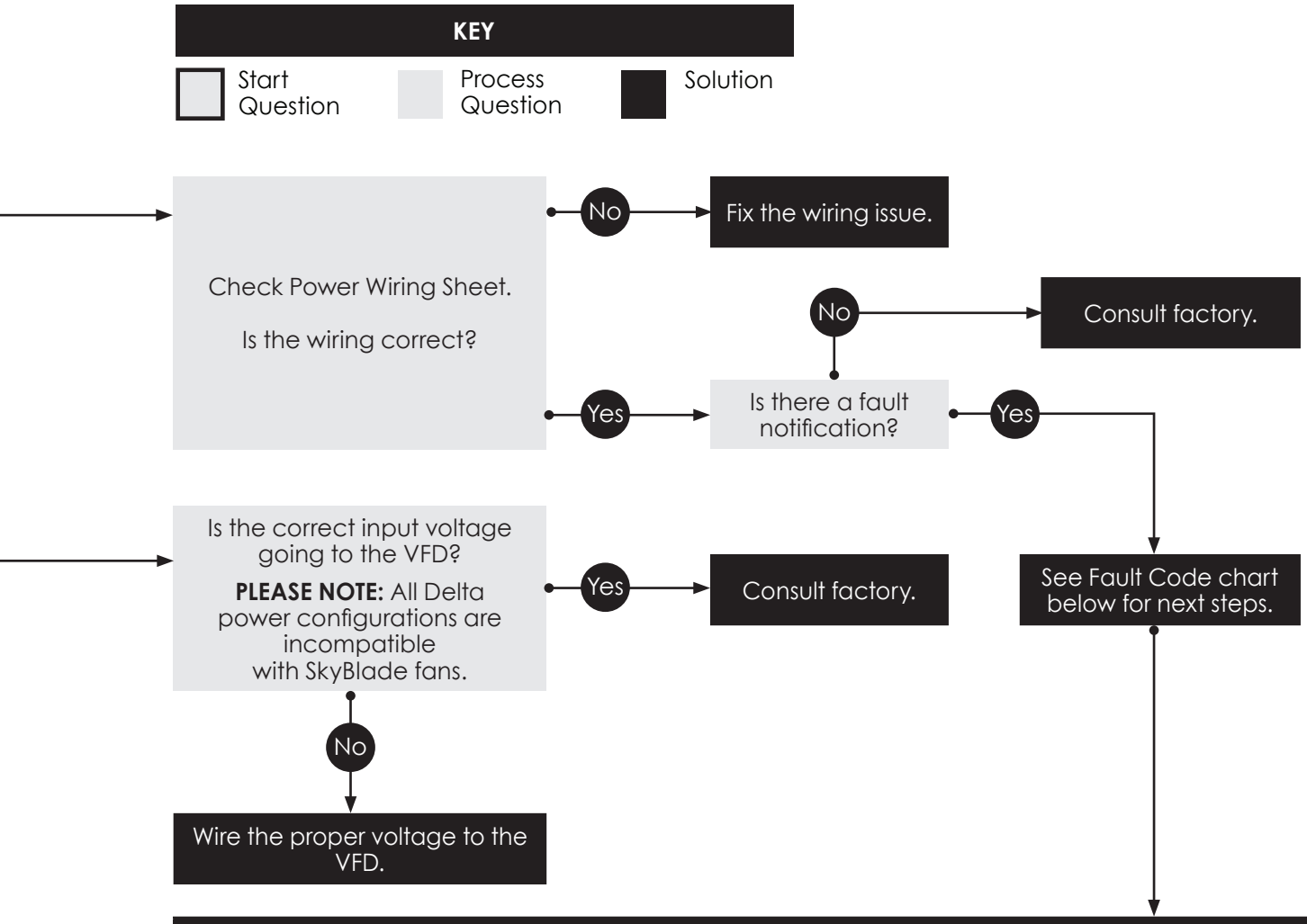

FAULT CODES	
Alarm 2021 Start enable 1 missing	The VFD is missing the fire relay inputs. See section 9.4 Wiring to a Fire Alarm Panel. If you are not using a fire relay shutoff, a jumper cable must be installed in the place of the fire relay.
Fault 0001 Output over current	Unplug outputs to the motor from the drive and run the VFD by itself. - If the drive shows the proper output and does not show fault, the motor may be blown. Contact factory. - If the drive shows the fault still, there is an internal short on the drive and the VFD needs to be replaced. Contact factory.
Fault 0002 DC over volt	- Check that the input voltage is WYE grounded power. Delta configurations are not accepted. - Check that the drive and fan are grounded per IOM requirements. - If there are voltage spikes or harmonics/transient voltage on the input power, a line protector may be required.
Fault 0009 Motor over temp	- If multiple fan diameters are being used, make sure the correct blades are on the motor.

11 USER SERVICING INSTRUCTIONS

⚠ WARNING/AVERTISSEMENT

Risk of fire, electric shock, or injury to persons during cleaning and user-maintenance!
Risque d'incendie, de choc électrique ou de blessures lors du nettoyage et de l'entretien par l'utilisateur!

Disconnect the appliance from the power supply and allow sufficient time for electrical discharge before servicing.

Débranchez l'appareil de l'alimentation électrique et laisser suffisamment de temps pour la décharge électrique avant l'entretien.

Before servicing or cleaning unit, switch power off at the service panel and lock the service disconnecting means to prevent power from being switched on accidentally.

Avant de réparer ou de nettoyer l'appareil, coupez l'alimentation électrique au panneau de service et bloquez les dispositifs de sectionnement pour éviter une mise en marche accidentelle.

When service or replacement of a component in the fan requires the removal or disconnection of a safety device, the safety device is to be reinstalled or remounted as previously installed. Failure to comply may result in serious personal injury.

Lorsque le service ou le remplacement d'un composant dans le ventilateur nécessite le retrait ou la déconnexion d'un dispositif de sécurité, le dispositif de sécurité doit être réinstallé ou remonté comme précédemment installé. Le non-respect peut entraîner des blessures graves.

Replacing the Fuse:

1. Disconnect power to the drive using the disconnect switch on the side of the VFD enclosure.
2. Grasp plug and remove from the receptacle or other outlet device. **Do not** unplug by pulling on cord.
3. Open fuse cover by pulling outward on the top lever.
4. Remove fuse carefully by pulling up on the exposed fuses.
5. **Risk of fire.** Replace fuse only with 25 Amp, 600 Volt ATMR25 Fast Acting Class C fuse.
6. Close fuse cover by pushing down on the top lever until completely closed.
7. Reconnect power to the drive via the disconnect switch on the side of the VFD enclosure.

11 USER SERVICING INSTRUCTIONS

Maintenance Checklist:

1. Ensure all mounting bolts are present and torqued to 90 ft-lb (122 N-m) using a calibrated torque wrench.
2. Ensure all bolts securing blades to the struts are present and torqued to 29 ft-lb (39 N-m) using a calibrated torque wrench.
3. Ensure all bolts on gearbox are tightened.
4. Inspect motor terminations inside junction box and ensure their tightness.
5. Check all connections of the fan controller and ensure their tightness.
6. Ensure blades are secured to one another by boomerang brackets.
7. Ensure screws securing wingtips to blades are tight.
8. Check to see if gear reducer is leaking, if so please contact customer service at 1-586-806-5107.
9. Check for the presence of the safety cable and wire rope clips. The cable should be wrapped around the I-beam or angle irons, leaving as little slack as possible. The wire rope clips should be securely fastened on the top side of the I-beam or angle irons.
10. Administer proper cleaning techniques such as dusting blades, motor, reducer and chassis. If desired, used a water based cleaner to polish blades.
11. Drain and replace the oil in the gearbox every 40,000 hours of operation with class 220 viscosity oil.

Maintenance Log:

DATE	MAINTENANCE PERFORMED	REPLACEMENT PARTS REQUIRED

NOTES

NOTES

SkyBlade Fan Company | Where Form Follows Function

24501 Hoover Road, Warren, Michigan 48089 USA
+1 (586) 806-5107 | sales@skybladefans.com
www.SkyBladeFans.com

SkyBlade® and **SkyBlade Fans**®
are the trademarks of SkyBlade Fans.

Intertek

LIMSTOL.0122_07